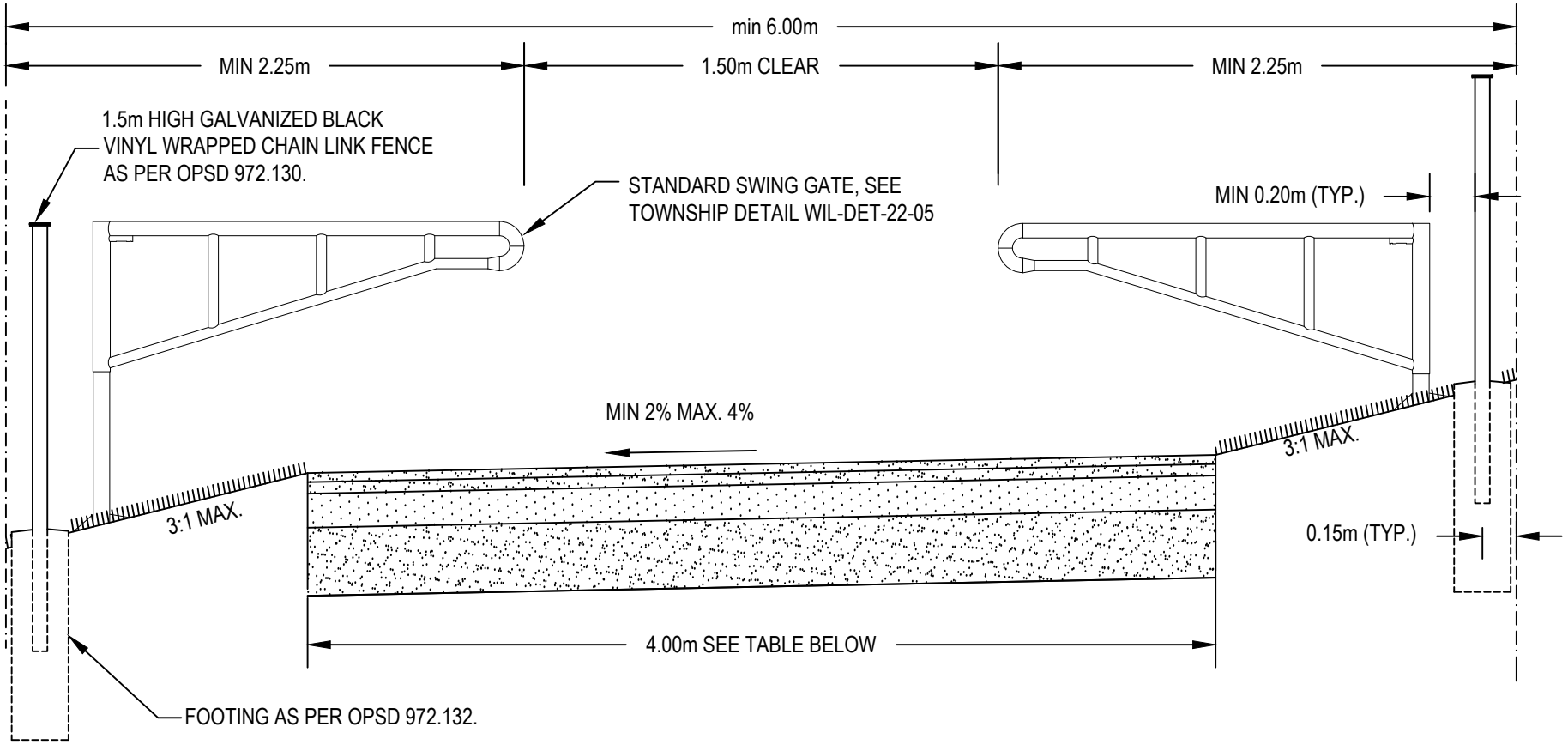

DESCRIPTION	WIDTH	GRAN 'B'	GRAN 'A'	SURFACE ASPHALT	BASE ASPHALT	No. OF GATES
6.0m MAINTENANCE ACCESS	4.0m	300mm	150mm	40mm - HL3	50mm - HL4	2
8.0m MAINTENANCE ACCESS	4.0m	300mm	150mm	40mm - HL3	50mm - HL4	2

NOTES:

1. GRANULAR 'A' & 'B' BEDDING SHALL BE COMPACTED TO 100% SPD. SUBGRADE SHALL BE COMPACTED TO 98% SPD.
2. IF SERVICES PRESENT SEE TOWNSHIP DETAIL WIL-DET-22-04.
3. SWING GATE OFFSET FROM ROW PROPERTY LINE TO BE 2.0m. AS SHOWN ON DETAIL WIL-DET-22-03
4. ANY OVERLAND FLOW FROM ROW IS TO BE CONTAINED IN MAINTENANCE ACCESS.

6.0m OR WIDER MAINTENANCE ACCESS DETAIL

TOWNSHIP OF WILMOT
PUBLIC WORKS AND ENGINEERING DEPARTMENT

DATE: FEBRRUARY 2022

SCALE: NTS

DWG No.: WIL-DET-22-01 | REV: 0

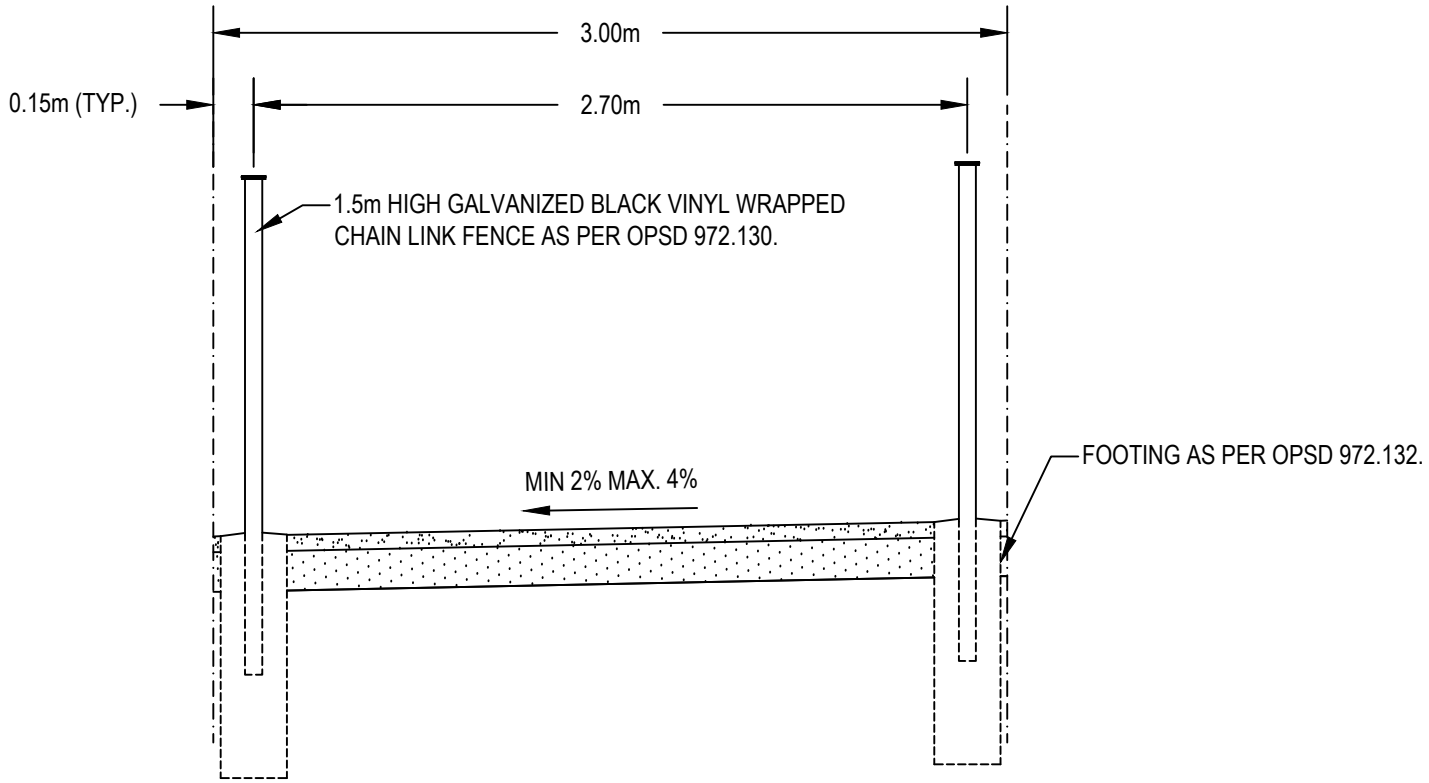

DESCRIPTION	WIDTH	GRAN 'B'	GRAN 'A'	CONCRETE
WALKWAY	3.0m	-	200mm	150mm - 32MPa

NOTES:

1. GRANULAR 'A' & 'B' BEDDING SHALL BE COMPACTED TO 100% SPD. TRAIL SUBGRADE SHALL BE COMPACTED TO 98% SPD.

3.0m WALKWAY DETAIL

TOWNSHIP OF WILMOT
PUBLIC WORKS AND ENGINEERING DEPARTMENT

DATE: FEBRUARY 2022

SCALE: NTS

DWG No.: WIL-DET-22-02 | REV: 0

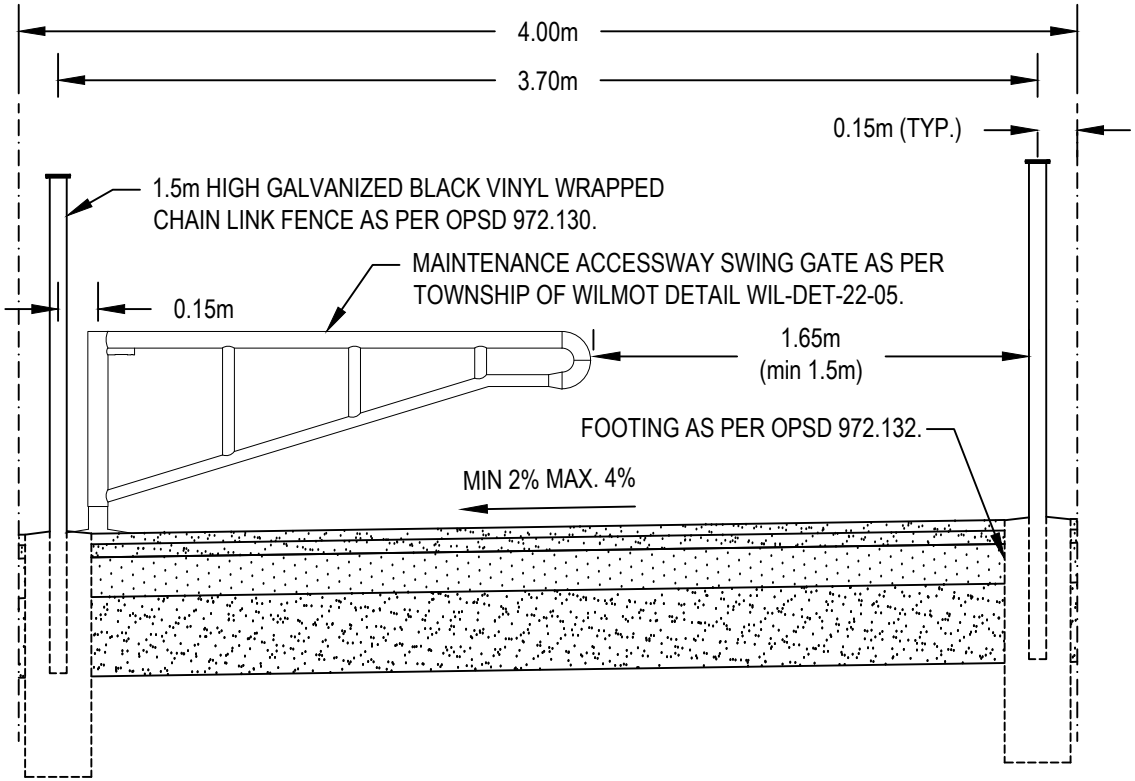

DESCRIPTION	WIDTH	GRAN 'B'	GRAN 'A'	ASPHALT
MAINTENANCE ACCESS	4.0m	300mm	150mm	40mm - HL3 50mm - HL4

NOTES:

1. ASPHALT SHALL BE COMPACTED TO 95% SPD. GRANULAR 'A' & 'B' BEDDING SHALL BE COMPACTED TO 100% SPD. SUBGRADE SHALL BE COMPACTED TO 95% SPD.

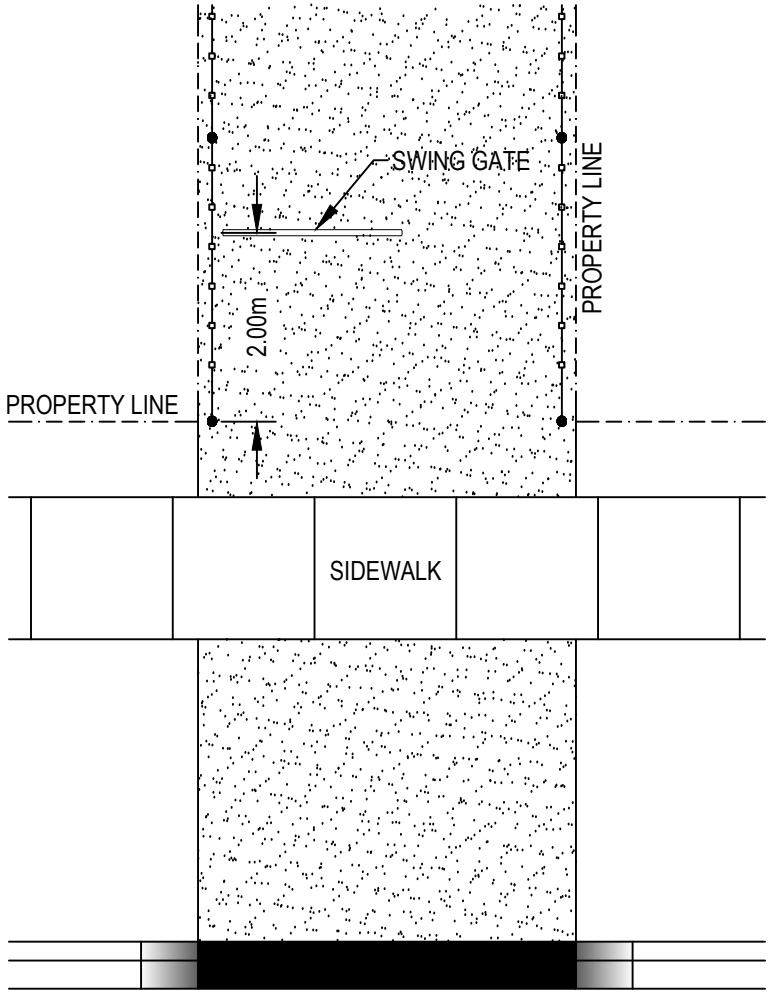

PLAN VIEW

4.0m MAINTENANCE ACCESS DETAIL

TOWNSHIP OF WILMOT
PUBLIC WORKS AND ENGINEERING DEPARTMENT

DATE: FEBRUARY 2022

SCALE: NTS

DWG No.: WIL-DET-22-03 | REV: 0

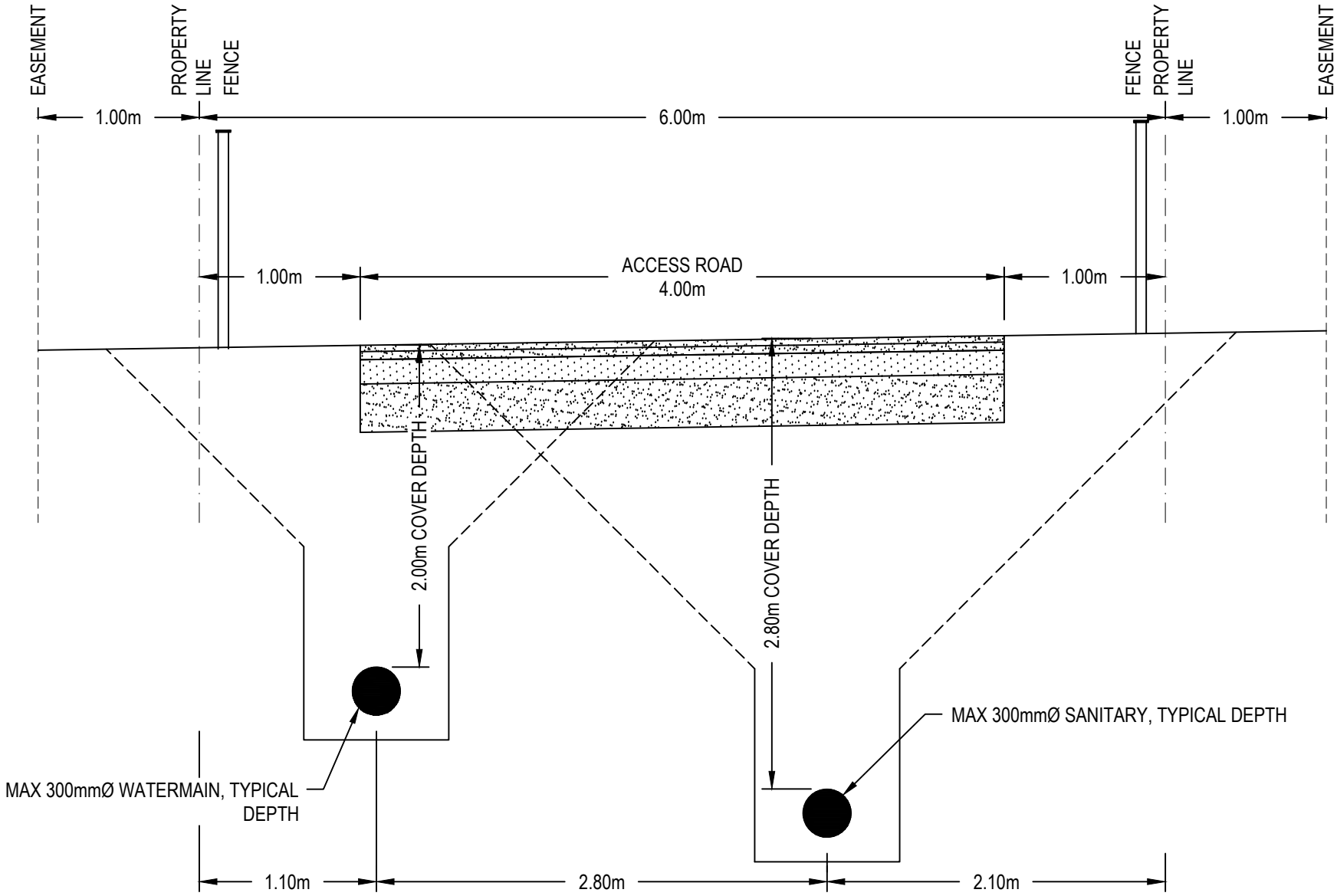

NOTES:

1. IF STORM SEWER ONLY, THEN 1 UTILITY PERMITTED CENTERED IN ACCESS ROAD BLOCK.
2. 6.0m WIDE ACCESS ROAD BLOCK WITH 1.0m EASEMENT ON EITHER SIDE OF BLOCK (WORKING EASEMENT).
3. DETAIL TO BE READ IN CONJUNCTION WITH TOWNSHIP DETAIL WIL-DET-22-01.

6.0m WIDE MAINTENANCE ACCESS SERVICING LAYOUT

TOWNSHIP OF WILMOT
PUBLIC WORKS AND ENGINEERING DEPARTMENT

DATE: FEBRUARY 2022

SCALE: NTS

DWG No.: WIL-DET-22-04 | REV: 0

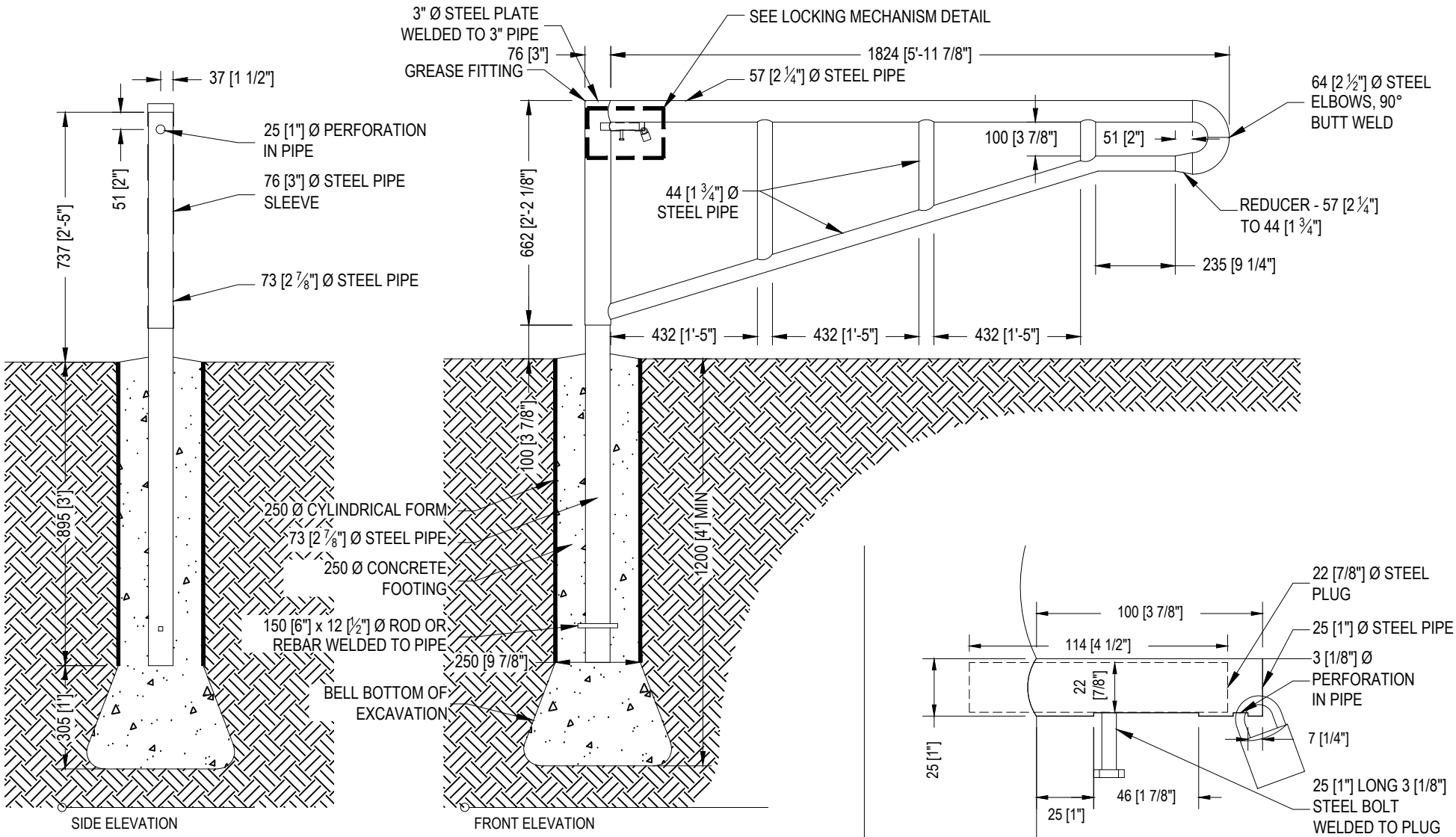

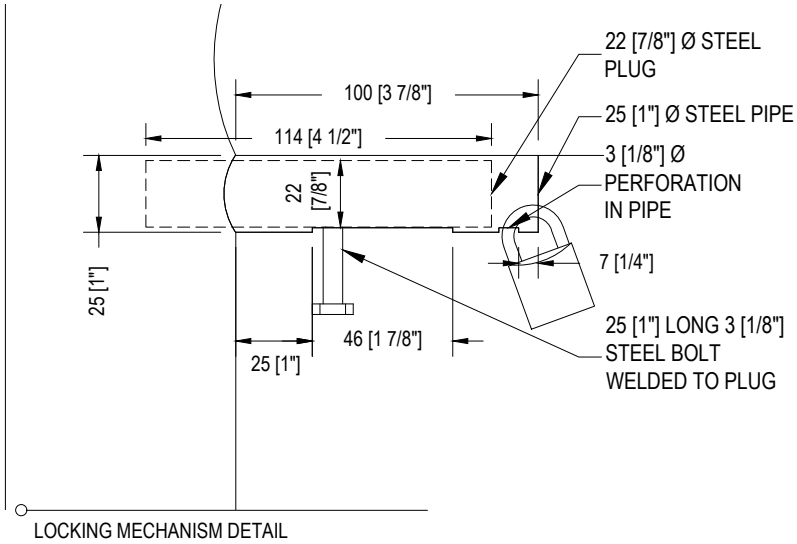

NOTES:
1. ALL CONNECTIONS ARE WELDED WITH COMPLETE SOLID WELD
2. ALL STEEL ON GATES TO BE HOT DIPPED GALVANIZED AFTER FABRICATION
3. PADLOCK TO BE SUPPLIED BY THE TOWNSHIP OF WILMOT
4. ALL UNITS ARE MILLIMETRES UNLESS NOTED OTHERWISE

MAINTENANCE ACCESSWAY SWING GATE DETAIL

TOWNSHIP OF WILMOT
PUBLIC WORKS AND ENGINEERING DEPARTMENT

DATE: FEBRUARY 2022

SCALE: NTS

DWG No.: WIL-DET-22-05 | REV: 0

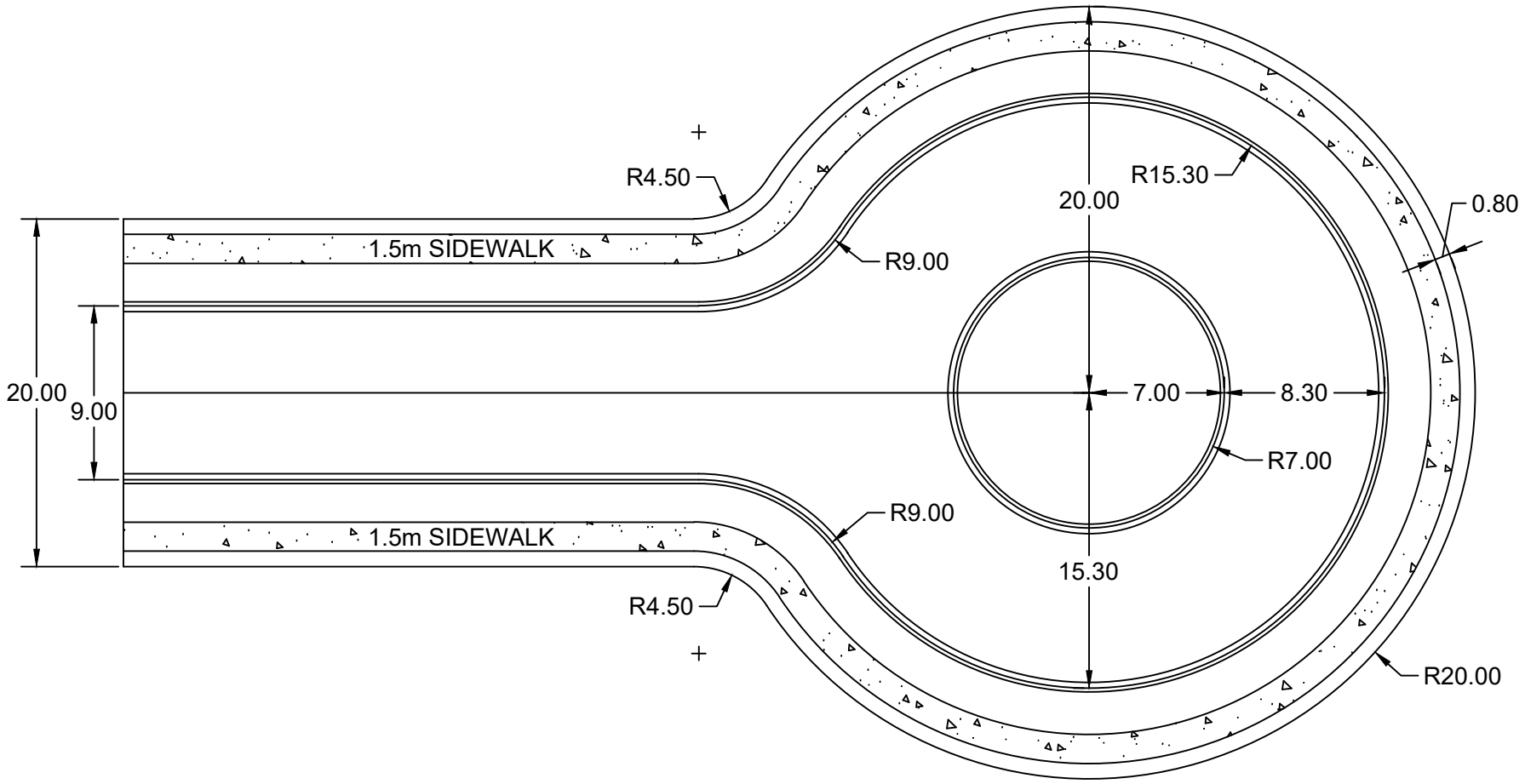

CUL-DE-SAC LAYOUT DETAIL

TOWNSHIP OF WILMOT
PUBLIC WORKS AND ENGINEERING DEPARTMENT

DATE: FEBRUARY 2022

SCALE: 1:300 @ 8.5 x 11

DWG No: WIL-DET-22-06 | REV: 0

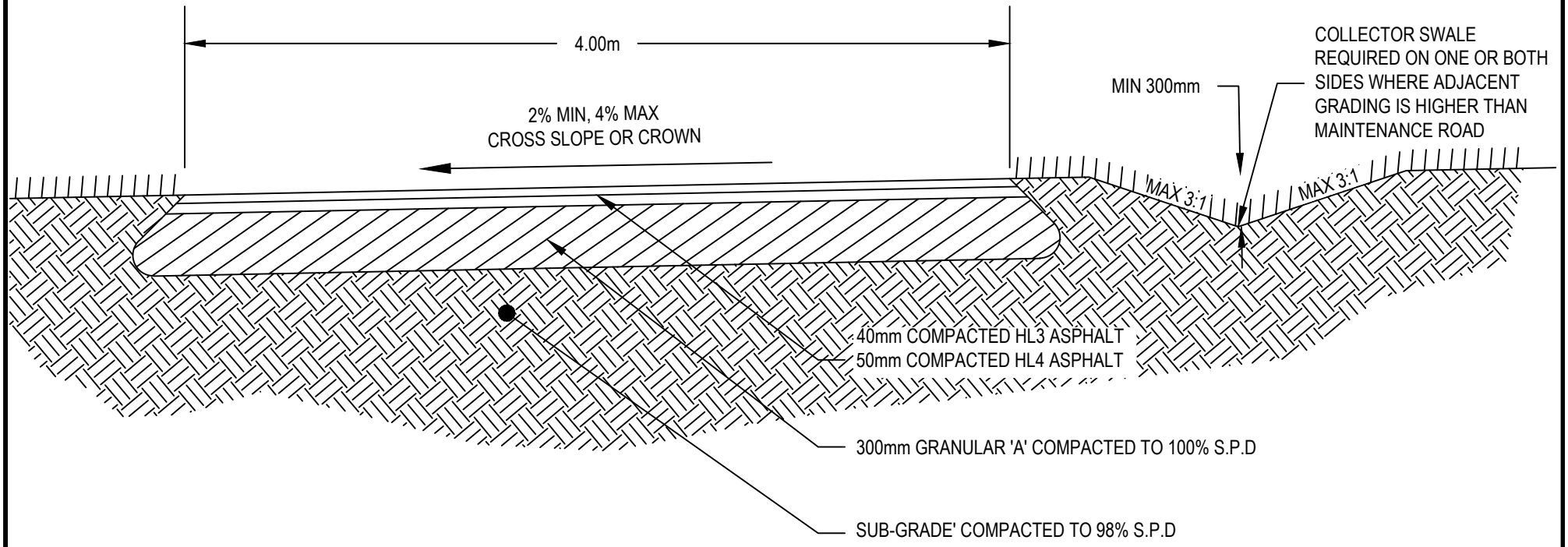

NOTE:
EXCAVATE TO A MINIMUM DEPTH OF 390mm OR END OF TOPSOIL LAYER, TO A MAXIMUM DEPTH OF 840mm. FILL ADDITIONAL EXCAVATED TOPSOIL WITH COMPACTED GRANULAR 'B' TO A MAXIMUM DEPTH OF 450mm.

ASPHALT MAINTENANCE ROAD DETAIL

TOWNSHIP OF WILMOT
PUBLIC WORKS AND ENGINEERING DEPARTMENT

DATE: FEBRUARY 2022

SCALE: NTS

DWG No.: WIL-DET-22-07 | REV: 0

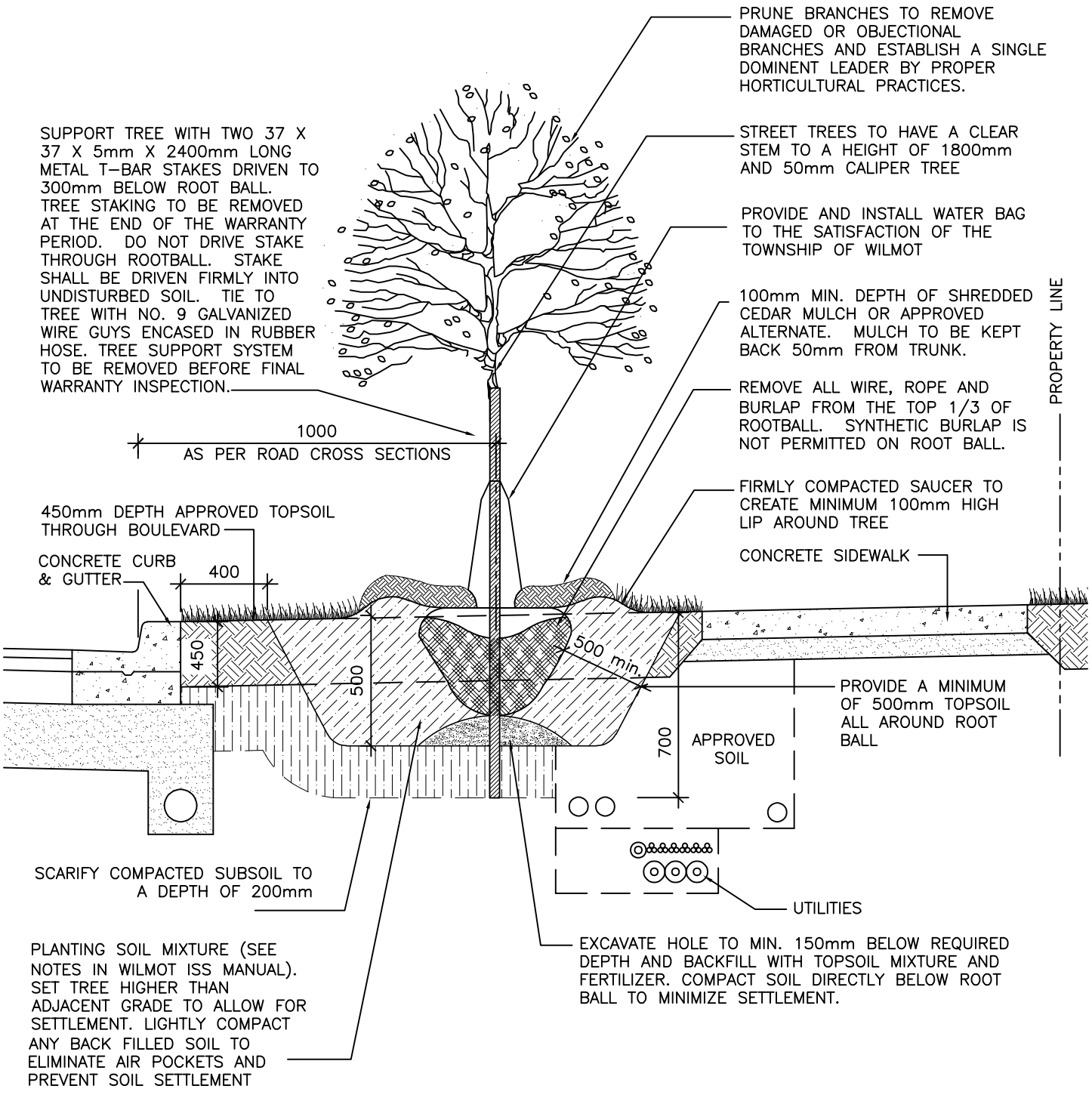

BOULEVARD TREE PLANTING DETAIL

TOWNSHIP OF WILMOT
PUBLIC WORKS AND ENGINEERING DEPARTMENT

DATE: FEBRUARY 2022	
SCALE: NTS	
DWG No. WIL-DET-22-08	REV: 0

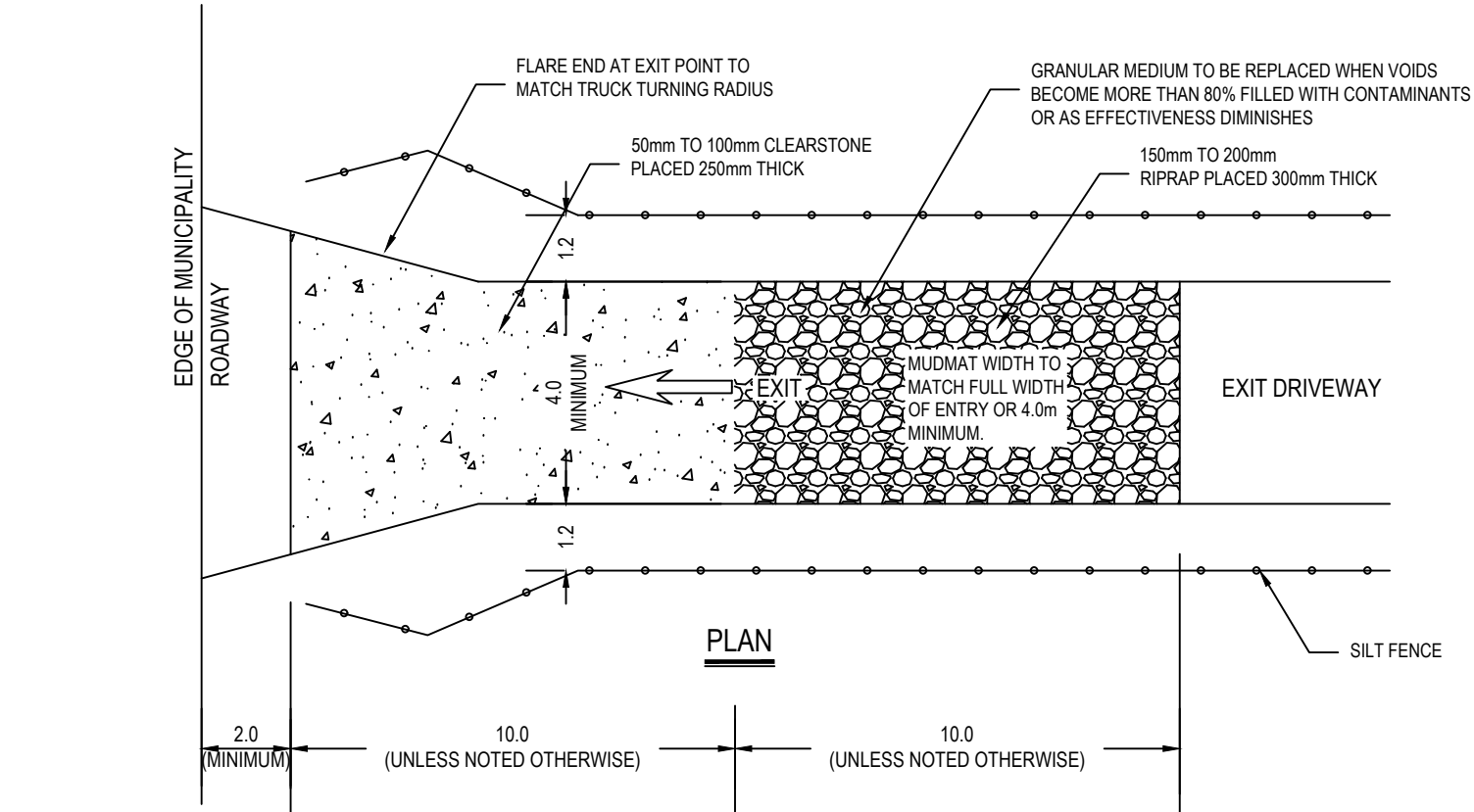

NOTE:

1. UNITS ARE IN METRES UNLESS NOTED OTHERWISE.
2. MUD TRACKING TO BE ENFORCED UNDER TOWNSHIP BY LAW
3. A LETTER OF CREDIT AND/OR CASH DEPOSIT TO BE COLLECTED BY THE TOWNSHIP

CONSTRUCTION MUD MAT DETAIL

TOWNSHIP OF WILMOT
PUBLIC WORKS AND ENGINEERING DEPARTMENT

DATE: FEBURARY 2022

SCALE: NTS

DWG No.: WIL-DET-22-09 | REV: 0

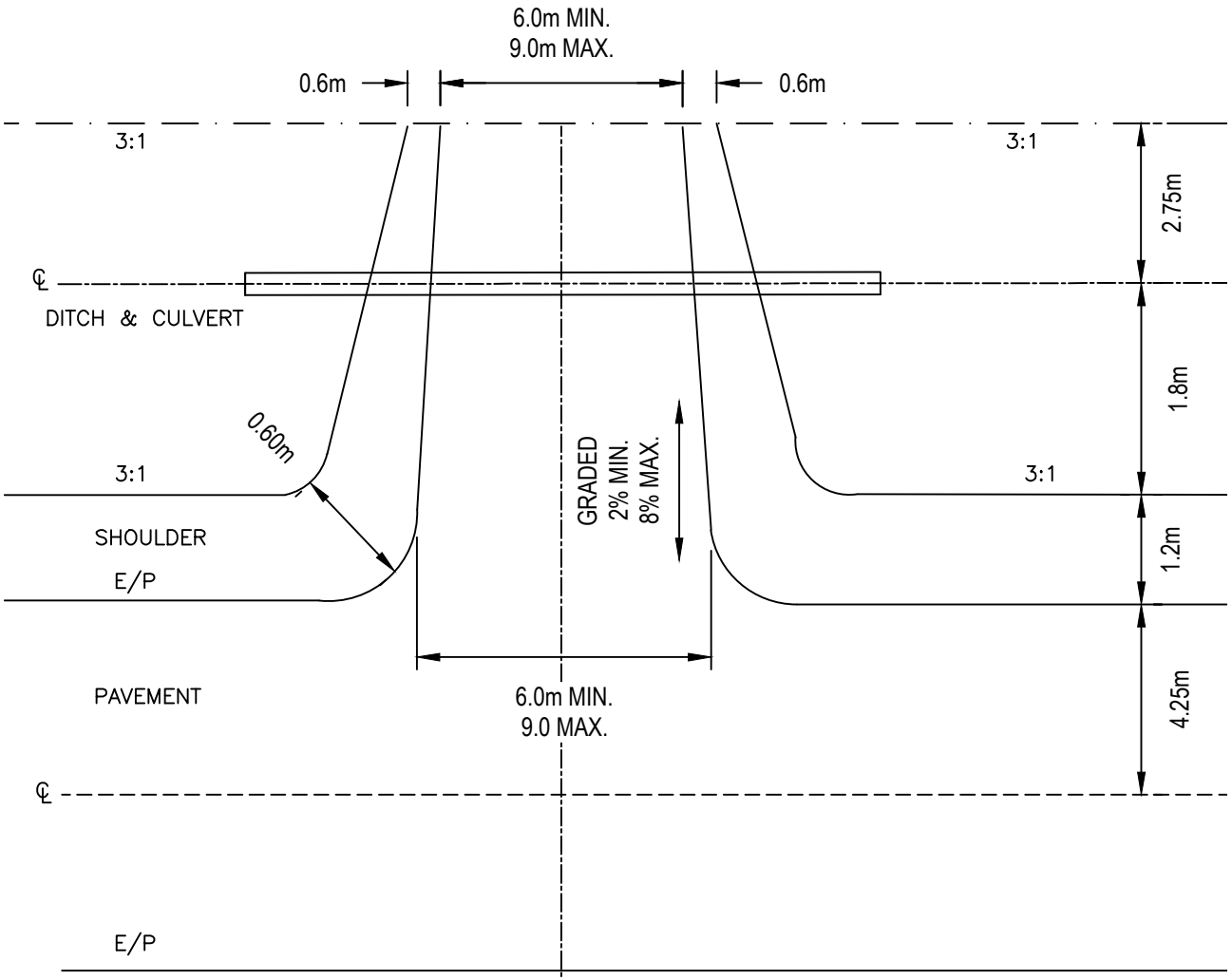

SINGLE DRIVEWAY

NOTES:

1. DRIVEWAY CROSS–SECTION TO BE:
   50mm ASPHALT
   150mm GRANULAR 'A'
   150mm GRANULAR 'B'
2. DRIVEWAY CULVERTS TO BE 400mm DIAMETER CMP MINIMUM, 1% SLOPE AND MINIMUM 0.30m COVER AND SET 50mm BELOW DITCH GRADES.
3. MINIMUM LENGTH OF CULVERT TO BE 12m.
4. FOR DOUBLE DRIVEWAY AND/OR DRIVEWAY OFF A TOWNSHIP ROAD. PAVEMENT TO BE AT STREET LINE 6m. AT EDGE OF PAVEMENT 7.50m AND GRAVEL SHOULDERS TO REMAIN THE SAME. CULVERT LENGTHS TO BE 14m.
5. INCREASE TO THE ABOVE MINIMUM STANDARDS TO BE APPROVED BY THE TOWNSHIP ENGINEER.

DRIVEWAY ENTRANCE RESIDENTIAL (RURAL) DETAIL

TOWNSHIP OF WILMOT
PUBLIC WORKS AND ENGINEERING DEPARTMENT

DATE: FEBRRUARY 2022

SCALE: NTS

DWG No.: WIL-DET-22-10 | REV: 0

NOTES:

1. THIS SIGN IS TO BE INSTALLED AND MAINTAINED BY THE DEVELOPER UNTIL FINAL ACCEPTANCE OF SURFACE WORKS IS ISSUED BY THE TOWNSHIP.
2. SIGN IS TO BE ON HEAVY GAUGE ALUMINUM AND FASTENED TO POST WITH STAINLESS STEEL HARDWARE.
3. SIGN IS TO HAVE A HIGH INTENSITY REFLECTIVE COATING AND MEET M.U.T.C. SPECIFICATIONS.
4. SIGN SHALL HAVE WHITE BACKGROUND WITH BLACK LETTERS.
5. ALL SIGN LOCATIONS TO BE REVIEWED BY THE TOWNSHIP.
6. SIGNS TO BE LOCATED AT ALL ENTRANCES TO DEVELOPMENT PHASES.

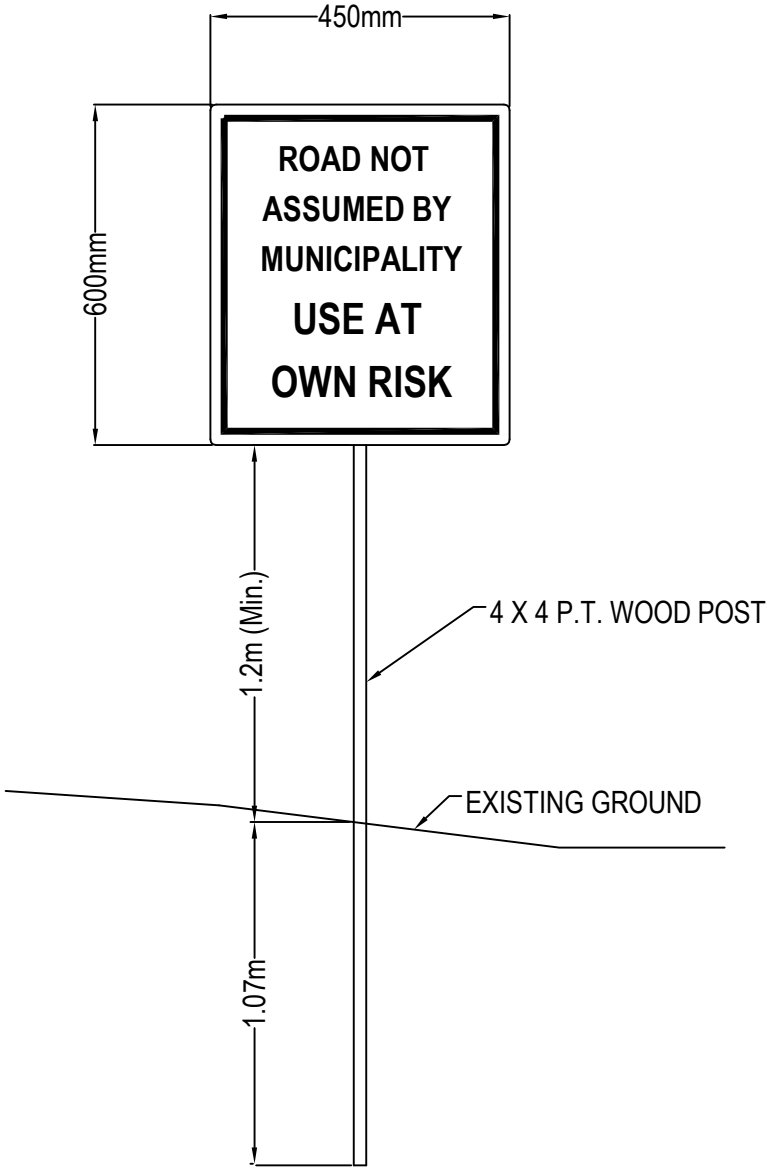

UNASSUMED ROAD SIGN DETAIL

TOWNSHIP OF WILMOT
PUBLIC WORKS AND ENGINEERING DEPARTMENT

DATE: FEBRUARY 2022

SCALE: NTS

DWG No. WIL-DET-22-11 | REV: 0

NOTES:

1. TRAFFIC CONTROL SIGN POST TO BE 80,000 PSI GALVANIZED "U" FLANGE POST BOLTED WITH STAINLESS STEEL HARDWARE TO A 1.20m GALVANIZED ANCHOR POST.
2. ALL SIGNS ARE TO BE ON HEAVY GAUGE ALUMINUM AND FASTENED TO POST WITH STAINLESS STEEL HARDWARE.
3. ALL SIGNS ARE TO HAVE A HIGH INTENSITY REFLECTIVE COATING AND MEET M.U.T.C. SPECIFICATIONS.
4. STREET NAME SIGNS ARE WHITE 100mm HIGH LETTERING ON A 150mm GREEN TAB.
5. ALL SIGN LOCATIONS TO BE REVIEWED BY THE TOWNSHIP.
6. SUBDIVIDER TO COVER THE COST OF TOWNSHIP OPERATIONS STAFF/AGENTS FOR INSTALLATION AND REFLECTIVITY TESTING AS PER MINIMUM MAINTENANCE STANDARDS.

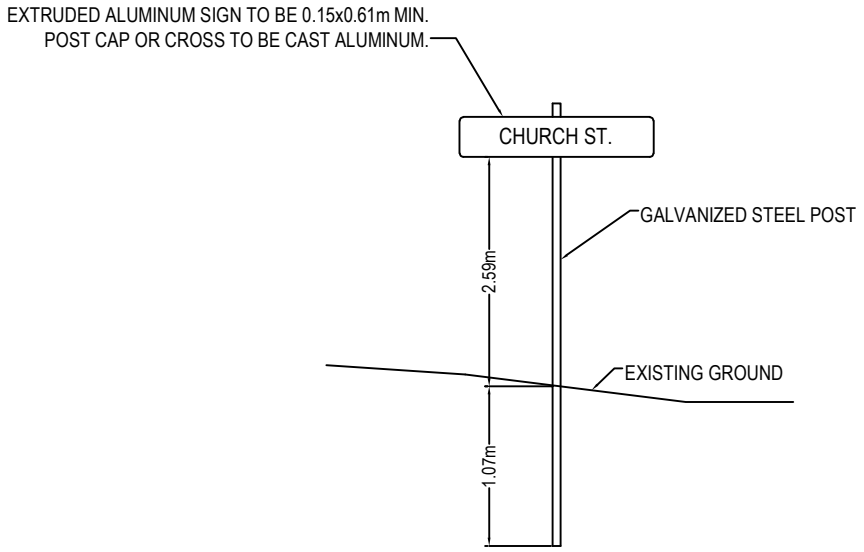

STREET NAME SIGN

N.T.S.

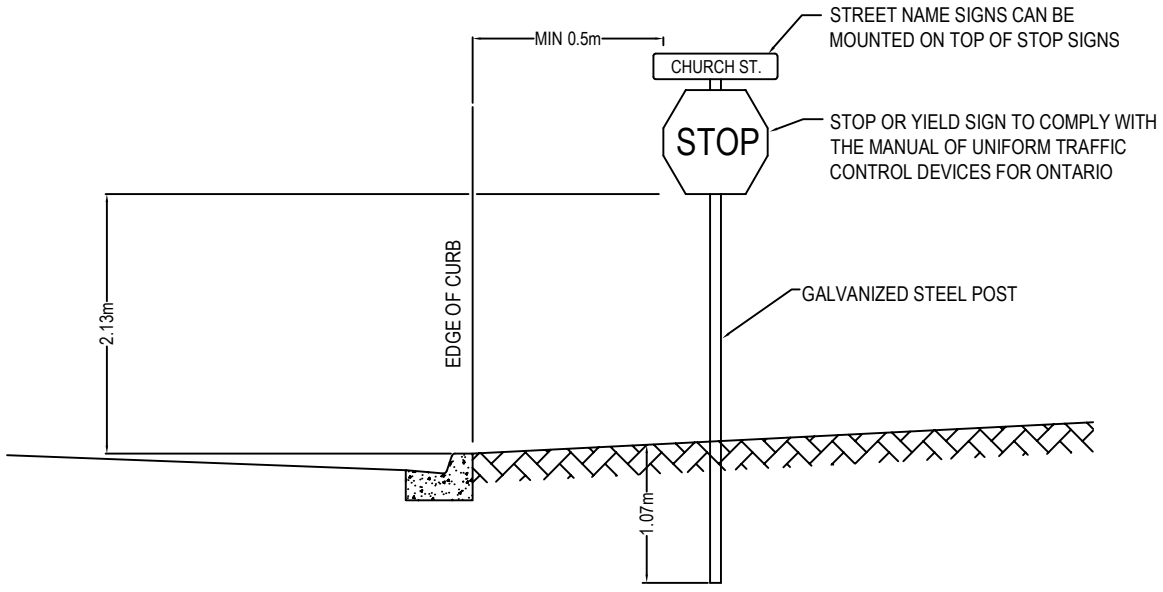

TRAFFIC CONTROL SIGN

N.T.S.

STREET NAME SIGN AND TRAFFIC CONTROL SIGN DETAIL

TOWNSHIP OF WILMOT
PUBLIC WORKS AND ENGINEERING DEPARTMENT

DATE: FEBRUARY 2022

SCALE: NTS

DWG No. WIL-DET-22-12 | REV: 0

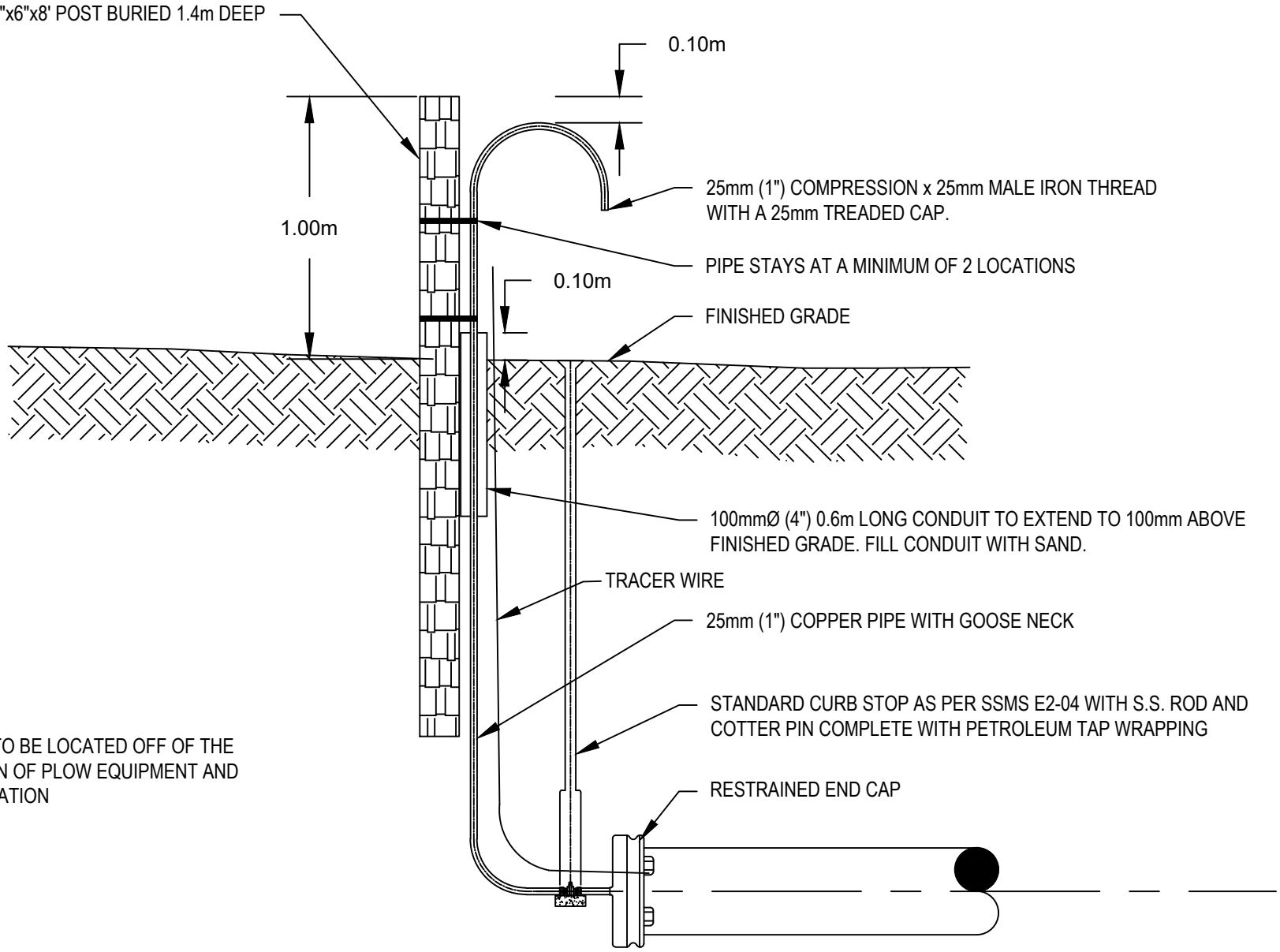

NOTE:
POST AND 25mm PIPE TO BE LOCATED OFF OF THE ROAD EDGE AND CLEAN OF PLOW EQUIPMENT AND SNOW BANK ACCUMULATION

25mm (1")
BLOW OFF DETAIL

TOWNSHIP OF WILMOT
PUBLIC WORKS AND ENGINEERING DEPARTMENT

DATE: FEBRUARY 2022

SCALE: NTS

DWG No.: WIL-DET-22-13 | REV: 0

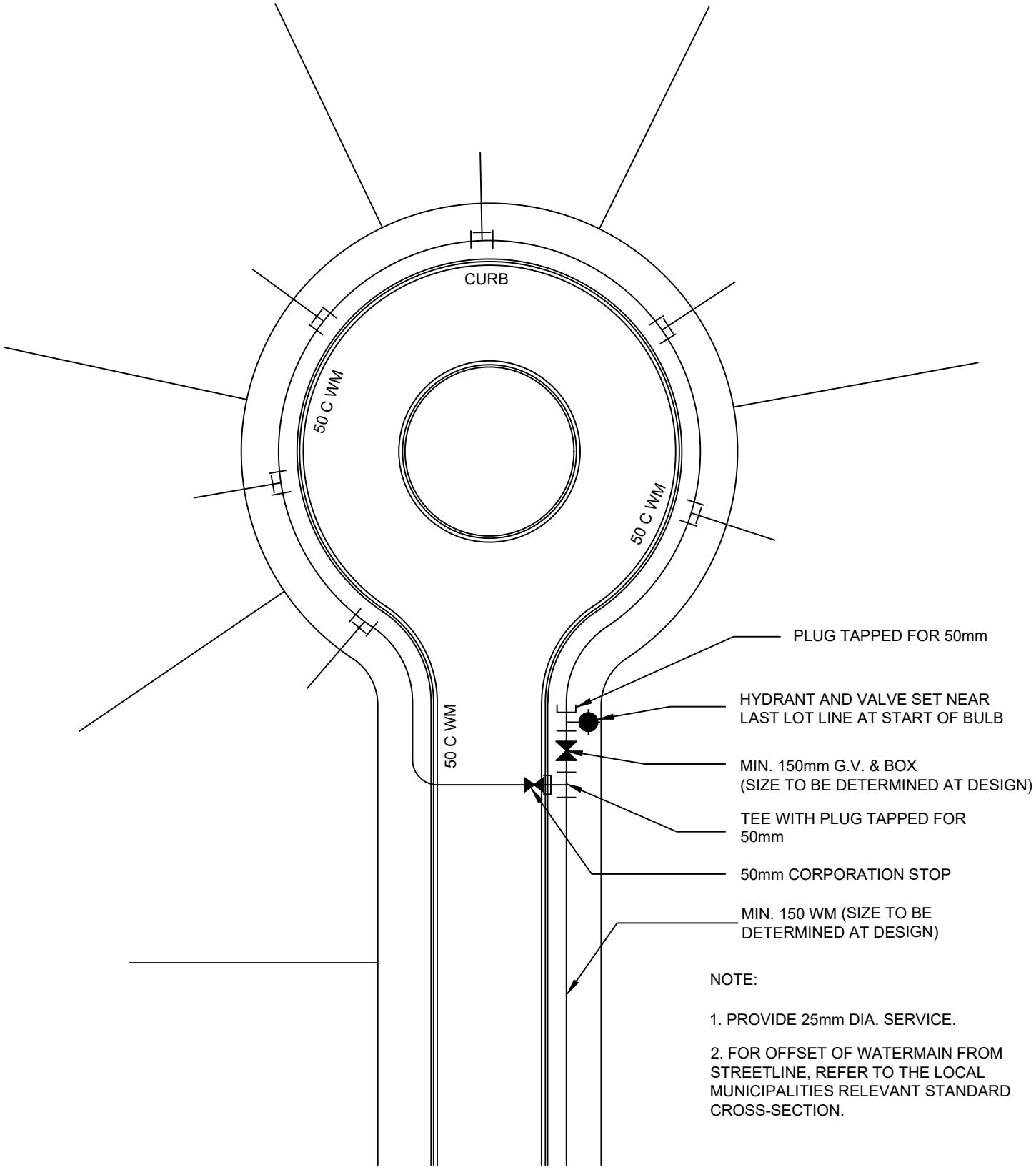

NOTE:

1. PROVIDE 25mm DIA. SERVICE.

2. FOR OFFSET OF WATERMAIN FROM STREETLINE, REFER TO THE LOCAL MUNICIPALITIES RELEVANT STANDARD CROSS-SECTION.

TYPICAL 50mm WATERMAIN ON CUL-DE-SAC DETAIL

TOWNSHIP OF WILMOT
PUBLIC WORKS AND ENGINEERING DEPARTMENT

DATE: FEBRUARY 2022

SCALE: NTS

DWG No.: WIL-DET-22-14 | REV: 0

NOTES:
SAMPLING STATION SHALL HAVE A 13mm (1/2") S.S. WATERWAY (NO LEAD).

TO PUMP STANDING WATER FROM THE UNIT AFTER USE A 10mm (3/8") 316 S.S. VENT TUBE IS TO BE USED.

THE ENCLOSURE SHALL BE SCHEDULE 40 PVC PIPE WITH LOCKABLE ACCESS DOOR.

THE ENCLOSURE SHALL PROTECT ALL COMPONENTS FROM CORROSIVE SOIL AND GROUNDWATER.

ALL WORKING PARTS SHALL BE REMOVABLE WITHOUT DIGGING OR ANY TOOLS.

EQUIPPED WITH A 25mm (1") FIP FOR CONNECTION TO THE WATERMAIN.

HOLES ARE TO BE DRILLED NEAR THE BOTTOM OF THE SAMPLE STATION AND WASHED STONE AND FILTER FABRIC PLACED AROUND THE BASE OF THE SAMPLE STATION.

ALL METALLIC FITTINGS ARE TO BE CATHODIC PROTECTED WITH PETROLATUM TAPE SYSTEM PER DGSSMS C.2.12.

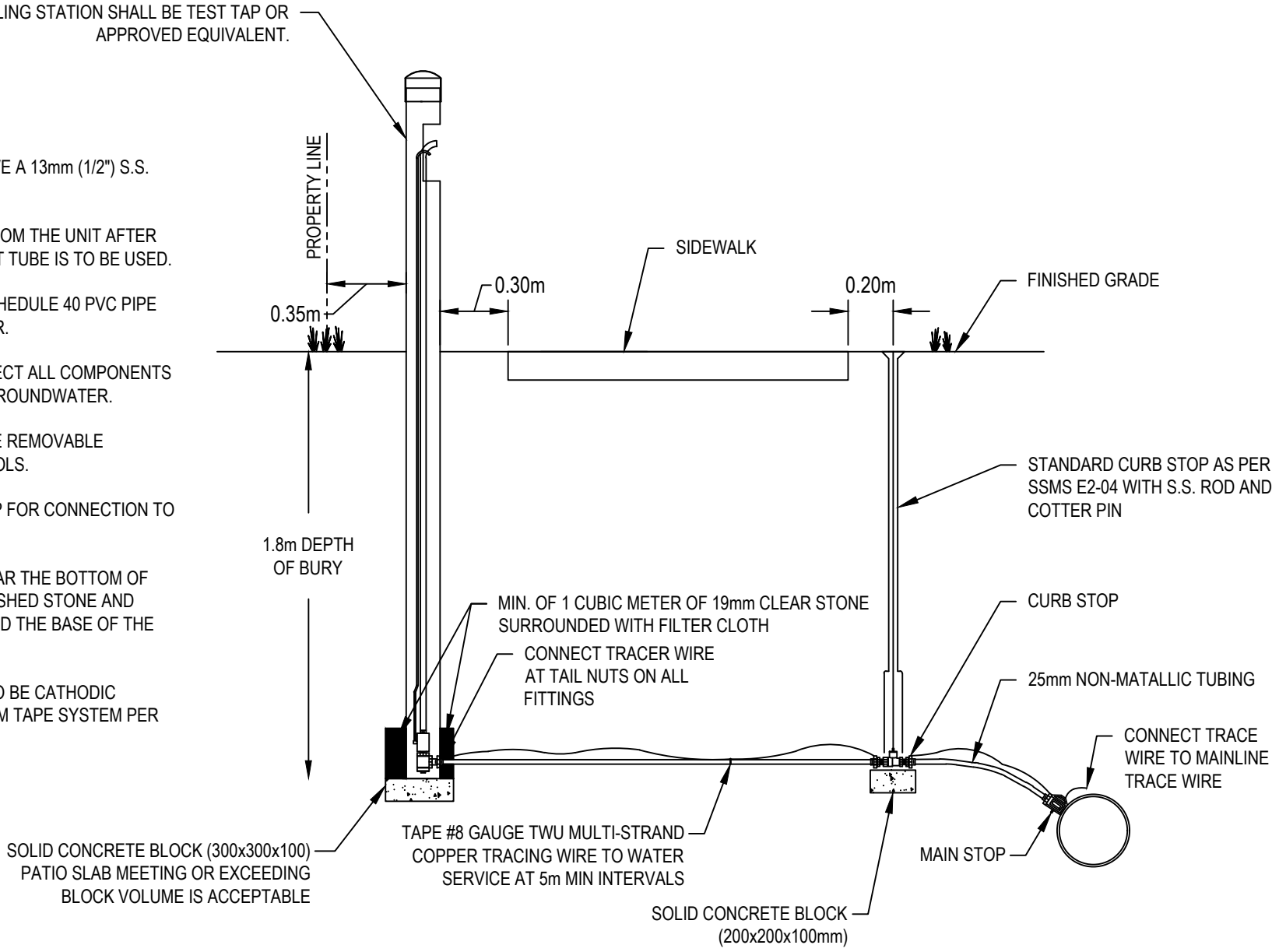

SAMPLE STATION DETAIL

TOWNSHIP OF WILMOT
PUBLIC WORKS AND ENGINEERING DEPARTMENT

DATE: FEBRUARY 2022

SCALE: NTS

DWG No.: WIL-DET-22-15 | REV: 0

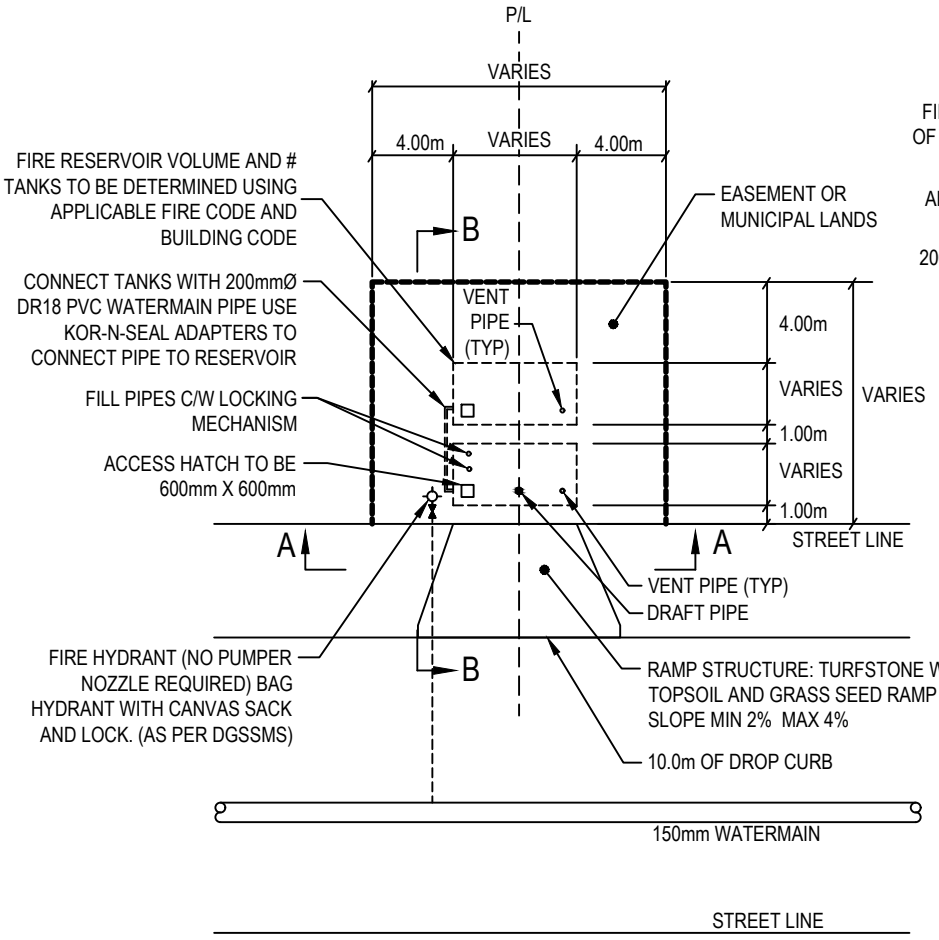

FIRE RESERVOIR DETAIL

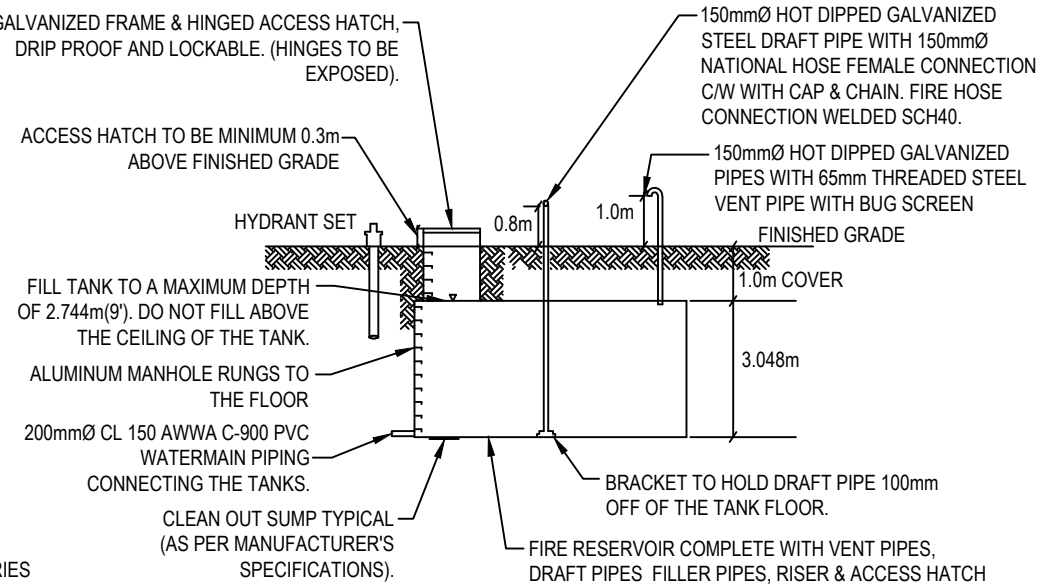

SECTION A-A

N.T.S.

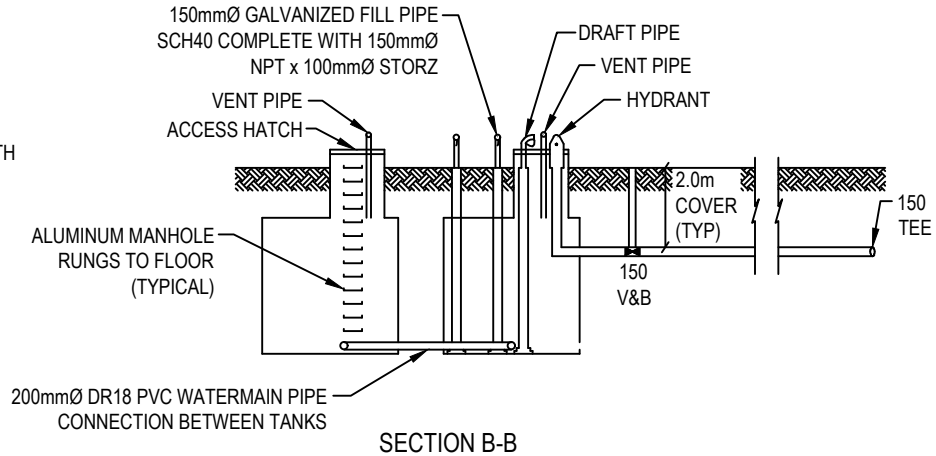

SECTION B-B

N.T.S.

NOTE:
WHEN TANKS ARE LOCATED IN AREAS WITH HIGH GROUND WATER TABLE, ENGINEER SHALL PROVIDE BOUANCY CALCULATIONS TO THE TOWNSHIP CONFIRMING ANTI FLOATATION RECOMMENDATIONS.

FIRE RESERVOIR DETAIL

TOWNSHIP OF WILMOT
PUBLIC WORKS AND ENGINEERING DEPARTMENT

DATE: FEBRUARY 2022

SCALE: NTS

DWG No.: WIL-DET-22-16 | REV: 0

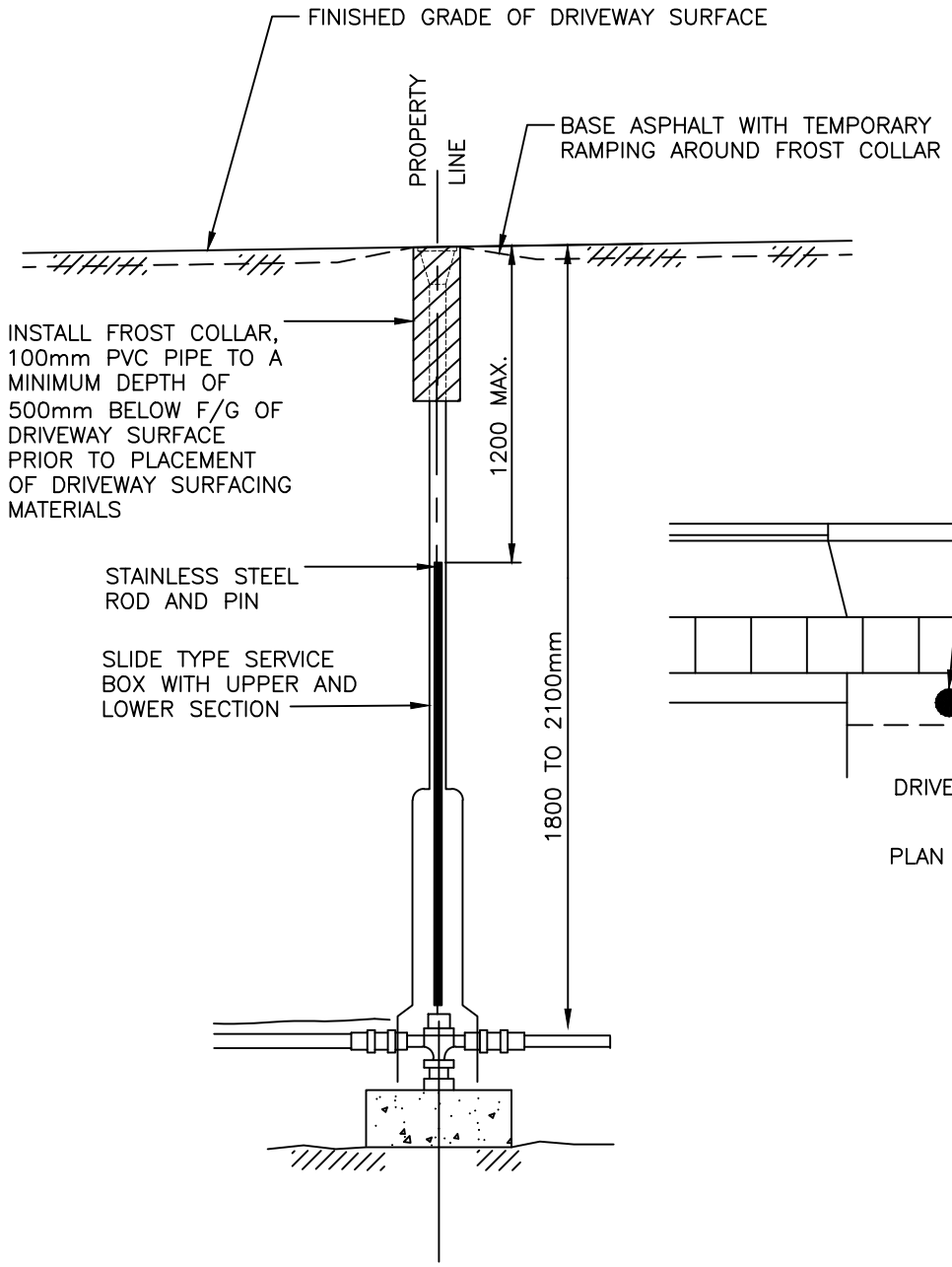

PROFILE VIEW

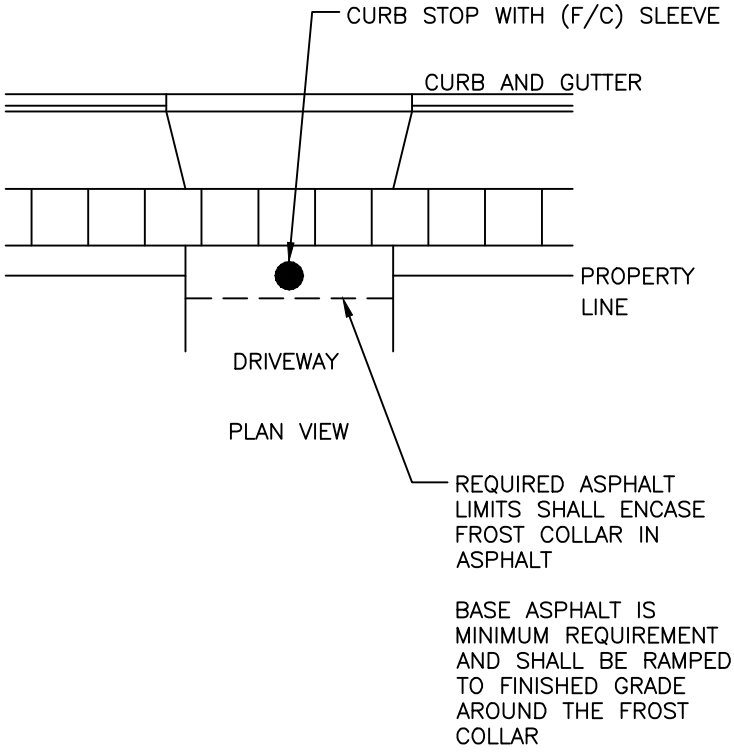

PLAN VIEW

NOTES:
1. ALL DIMENSIONS ARE IN MILLIMETERS UNLESS OTHERWISE SHOWN.
2. FROST COLLAR TO BE ENCASED IN ASPHALT FOR ACCEPTANCE AND REFUND OF DEPOSIT.
3. TOP OF FROST COLLAR SLEEVE TO BE SET AT THE ELEVATION OF FINISHED SURFACE.
4. IF ONLY PLACING THE BASE COAT OF ASPHALT, THE ASPHALT SHALL BE RAMPED AROUND THE SLEEVE UP TO FINISHED GRADE TO PREVENT DAMAGE TO THE SLEEVE.
5. ASPHALT RAMPING NOT REQUIRED WHEN DRIVEWAY IS FULLY COMPLETED TO FINISH GRADE WITH SURFACE ASPHALT.

FROST COLLAR DETAIL

TOWNSHIP OF WILMOT
PUBLIC WORKS AND ENGINEERING DEPARTMENT

DATE: FEBRUARY 2022

SCALE: NTS

DWG No.: WIL-DET-22-17 | REV: 0

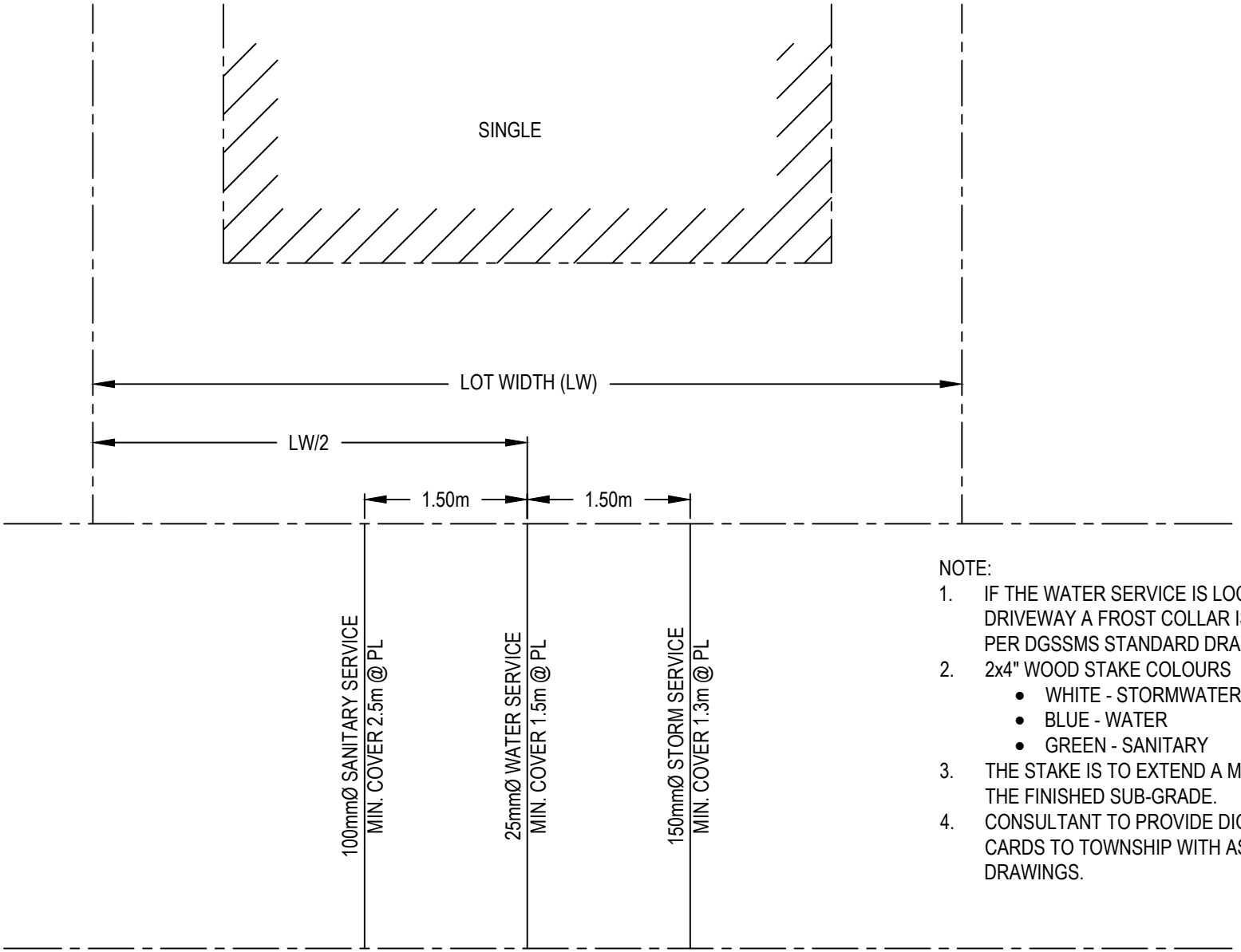

NOTE:

1. IF THE WATER SERVICE IS LOCATED WITHIN A DRIVEWAY A FROST COLLAR IS TO BE INSTALLED PER DGSSMS STANDARD DRAWING E2-03.
2. 2x4" WOOD STAKE COLOURS
   - WHITE - STORMWATER
   - BLUE - WATER
   - GREEN - SANITARY
3. THE STAKE IS TO EXTEND A MINIMUM 1.2m ABOVE THE FINISHED SUB-GRADE.
4. CONSULTANT TO PROVIDE DIGITAL SERVICE CARDS TO TOWNSHIP WITH AS RECORDED DRAWINGS.

LOT SERVICING LOCATION DETAIL

TOWNSHIP OF WILMOT
PUBLIC WORKS AND ENGINEERING DEPARTMENT

DATE: FEBRUARY 2022

SCALE: NTS

DWG No.: WIL-DET-22-18 | REV: 0

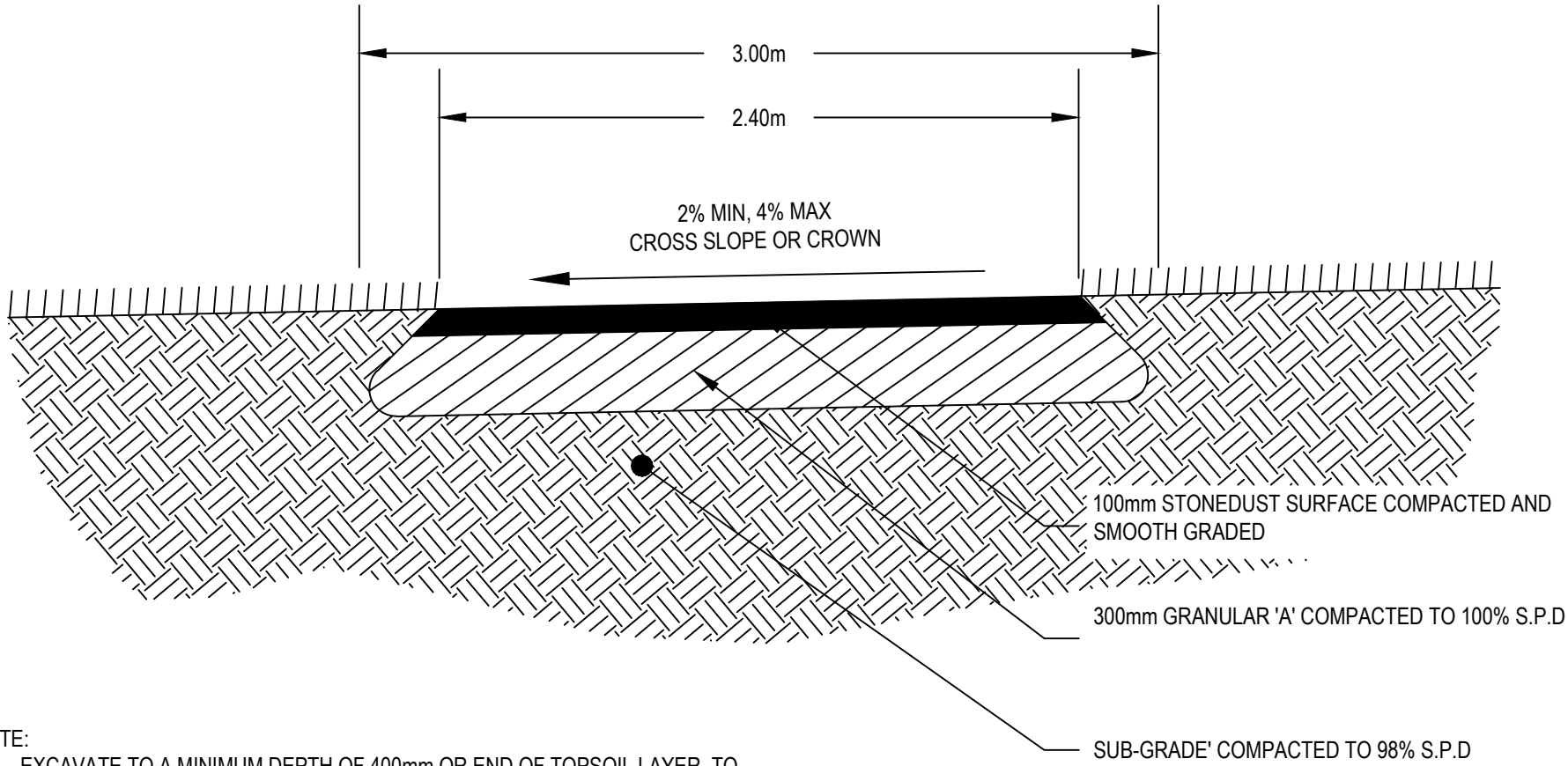

NOTE:

1. EXCAVATE TO A MINIMUM DEPTH OF 400mm OR END OF TOPSOIL LAYER, TO A MAXIMUM DEPTH OF 850mm. FILL ADDITIONAL EXCAVATED TOPSOIL WITH COMPACTED GRANULAR 'B' TO A MAXIMUM DEPTH OF 450mm.
2. IF LONGITUDINAL GRADE EXCEEDS 4% STONEDUST TO BE REPLACED WITH 40mm HL3 AND 50mm HL4 AS PER TOWNSHIP DETAIL WIL-DET-22-01.

STONE DUST TRAIL DETAIL

TOWNSHIP OF WILMOT
PUBLIC WORKS AND ENGINEERING DEPARTMENT

DATE: FEBRUARY 2022

SCALE: NTS

DWG No.: WIL-DET-22-19 | REV: 0

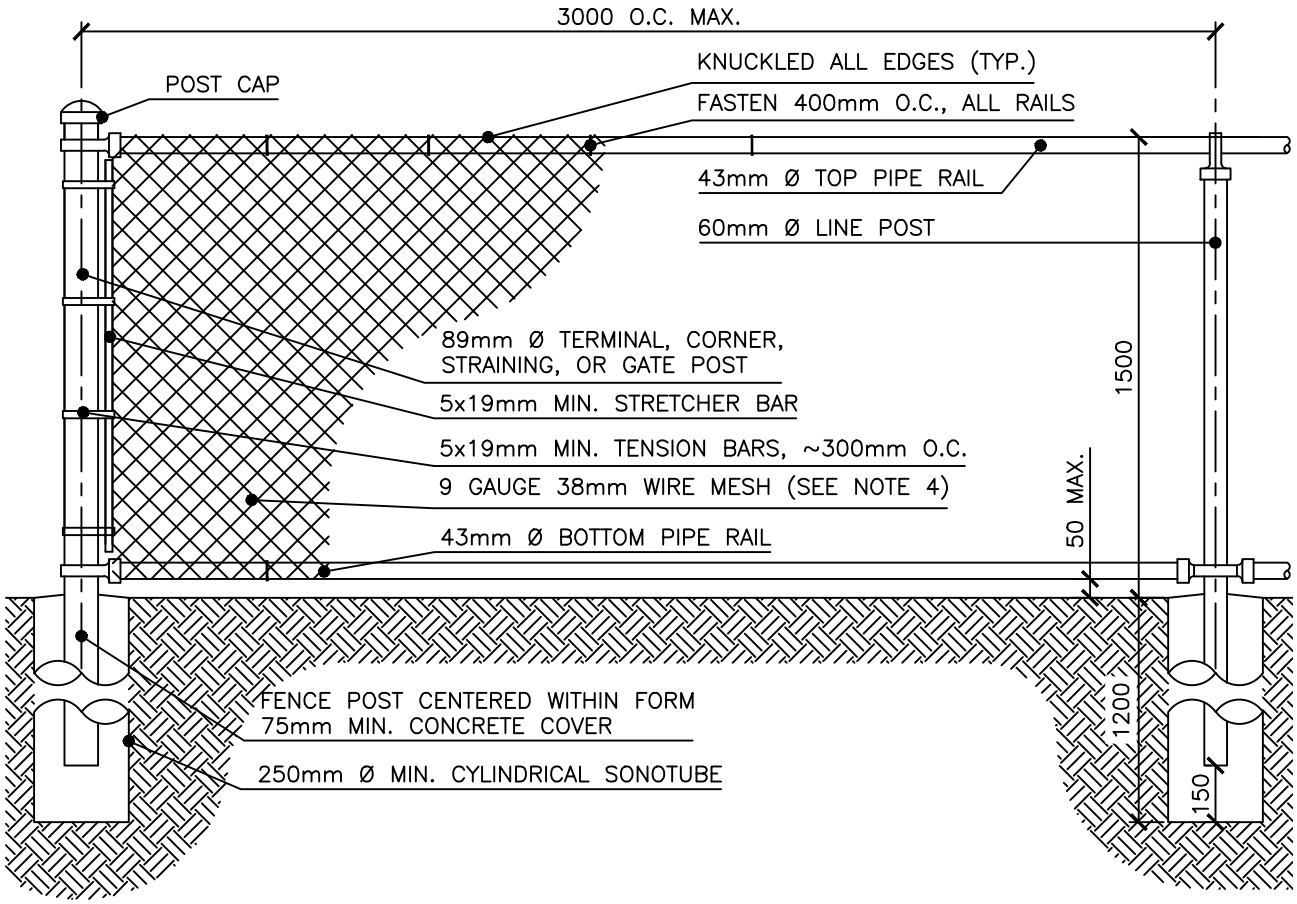

NOTES:

1. ALL FENCING AND FASTENERS TO BE GALVANIZED PRIOR TO FABRICATION.
2. EXTRUDED BLACK VINYL COATING MAY BE APPLIED PROVIDED ALL FENCING MATERIALS ARE GALVANIZED PRIOR TO COATING. WHERE VINYL COATING APPLIED, ALL FENCING ELEMENTS TO BE COATED.
3. MID–BRACING RAILS REQUIRED WHERE FENCE HEIGHT IS GREATER THAN THAT SHOWN ON THE DETAIL. MID–BRACE TO BE 43mm Ø RAIL ON TERMINAL, CORNER, STRAINING OR GATE POSTS.
4. WIRE MESH SHALL BE MEASURED AT 9 GAUGE *PRIOR* TO GALVANIZING AND/OR ADDITIONAL COATING.
5. CONCRETE FOOTINGS TO BE 20Mpa STRENGTH AT 28 DAYS
6. ALL PIPE TO BE SCHEDULE 40.

CHAINLINK FENCE WALKWAY BLOCK DETAIL

TOWNSHIP OF WILMOT
PUBLIC WORKS AND ENGINEERING DEPARTMENT

DATE:	FEBRUARY 2022
SCALE:	NTS
DWG No.:	WIL-DET-22-20
REV:	0

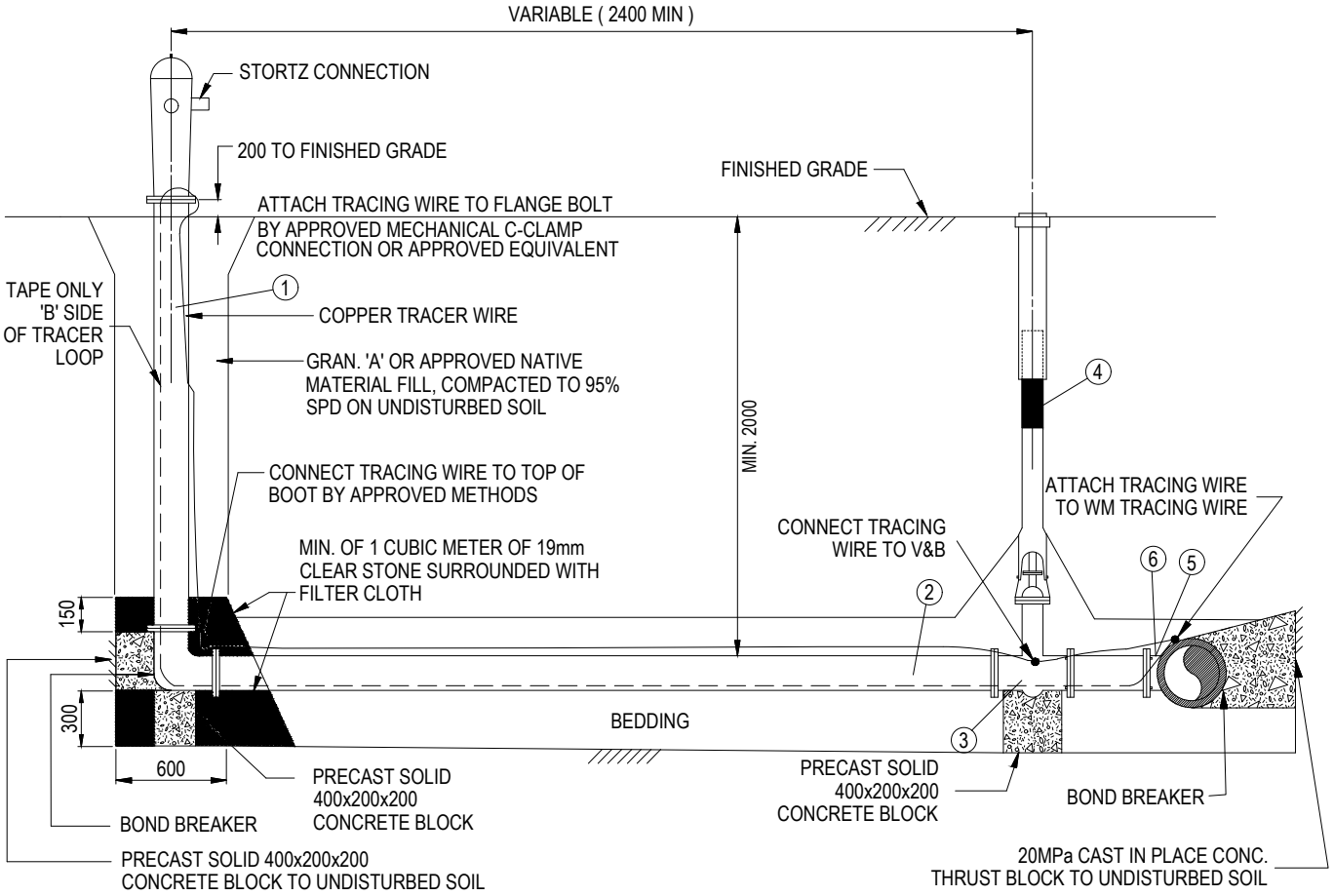

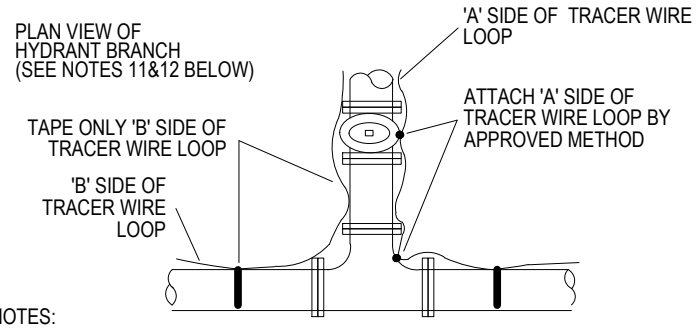

MANUFACTURED ITEMS LIST

1. REGULAR 150mm DIA. BARREL USE EXTENSION IF REQUIRED.
2. MINIMUM DIA. PIPE FOR HYDRANT LEADS TO BE 150mm DIA.
3. MINIMUM SIZE M.J. GATE VALVE TO BE 150mm DIA.
4. VALVE BOX
5. USE ANCHOR TEE UP TO AND INCLUDING 450mm DIA. WITH MECHANICAL RESTRAINTS.
6. FOR TEES LARGER THAN 450mm DIA. USE MECHANICAL RESTRAINTS.

NOTES:

1. HYDRANT TO BE SET PLUMB WITH STEM EXTENSIONS TO SUIT DEPTH OF BRANCH. BRANCH TO BE SET LEVEL. EXTENSIONS TO BE INSTALLED BETWEEN UPPER AND LOWER BARREL SECTION. ONLY ONE EXTENSION (MAX. 1.0m LONG) PER HYDRANT. IF MORE HEIGHT IS REQUIRED, THEN A LONGER BARREL SHALL BE USED.
2. ALL BLOCKING TO BE AGAINST UNDISTURBED TRENCH WALL.
3. ALL DIMENSIONS ARE IN MILLIMETERS UNLESS OTHERWISE SPECIFIED.
4. BOND BREAKER TO BE USED BETWEEN CONCRETE AND FITTINGS.
5. CORROSION PROTECTION SHALL BE AFFIXED AS PER STANDARD SPECIFICATIONS FOR WATERMAIN CONSTRUCTION.
6. NO BENDS ON HYDRANT LEADS UNLESS APPROVED.
7. ALL JOINTS TO BE FULLY RESTRAINED FROM HYDRANT BOOT TO TEE (THREADED RODS SHALL NOT BE USED).
8. PLUG DRAIN HOLE IN HIGH WATER TABLE.
9. HYDRANTS SHALL BE CLEAR OF OBSTRUCTIONS FOR A DISTANCE OF 0.6m REAR, 2.0m ON SIDES AND CLEAR 9. TO CURB IN FRONT.
10. 'A' SIDE OF TRACER WIRE LOOP TO BE CONNECTED TO:
    a. ANCHOR TEE
    b. HYDRANT VALVE
    c. HYDRANT BARREL
12. 'B' SIDE OF TRACER WIRE LOOP TO BE TAPED ONLY TO:
    a. HYDRANT BARREL
    b. HYDRANT LEAD
    c. WATERMAIN
13. CAPS AND BONNET ARE TO BE PAINTED RED.

STANDARD HYDRANT INSTALLATION DETAIL

TOWNSHIP OF WILMOT
PUBLIC WORKS AND ENGINEERING DEPARTMENT

DATE: FEBRUARY 2022

SCALE: NTS

DWG No.: WIL-DET-22-21 | REV: 0

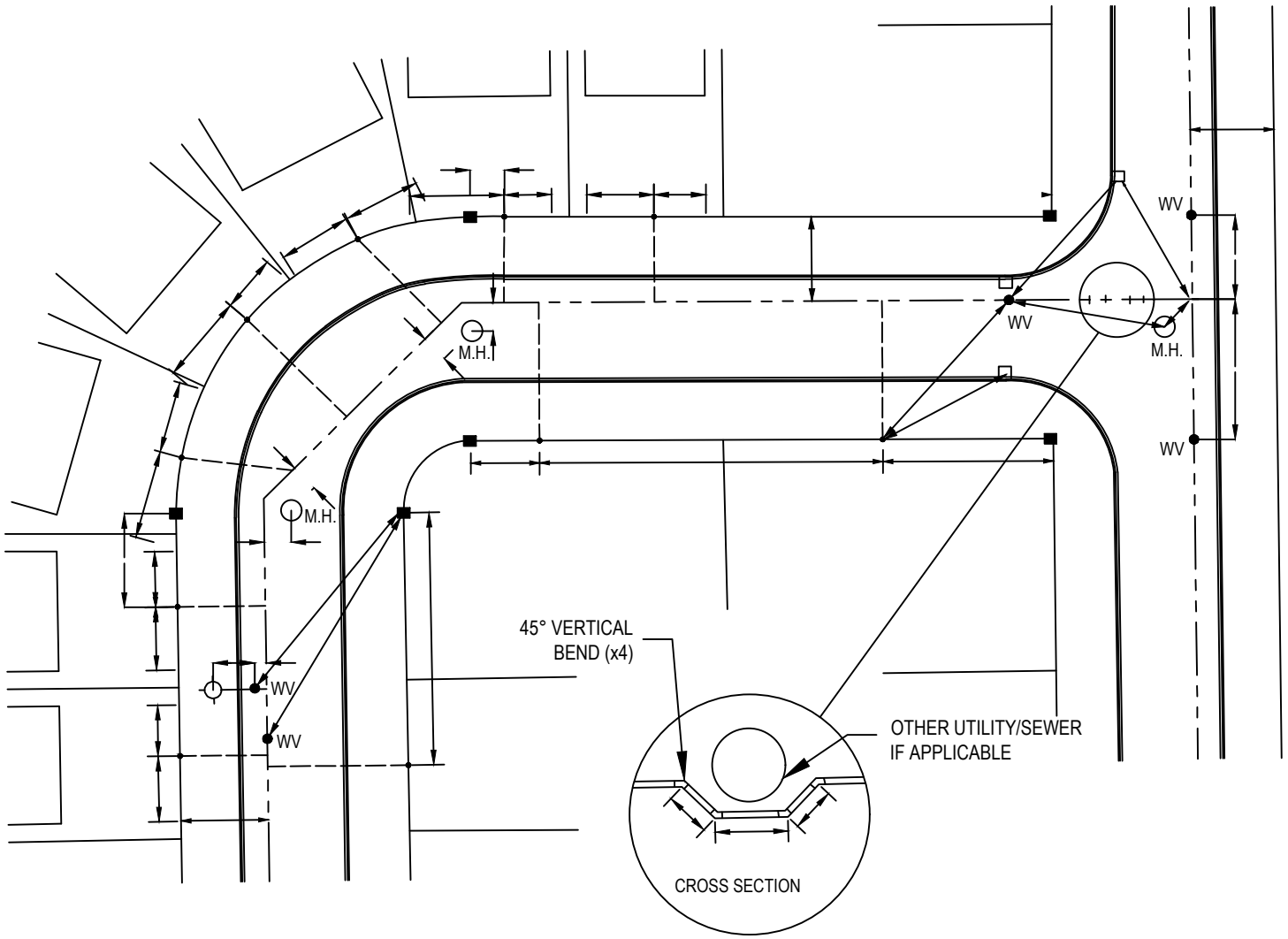

NOTES:

1. CHAINAGE TO BE WATERMAIN CHAINAGE NOT ℄ OF THE ROAD.
2. A MIN. OF 2 TIES AT RIGHT ANGLES OR LESS ARE REQUIRED FOR VALVES AND FITTINGS OTHERTHAN CURB STOPS.
3. MEASUREMENTS FOR CURB STOPS TO BE 90° FROM HOUSE CORNERS TO CURB STOP. THE ALIGNMENT PROJECTION TO HOUSE DISTANCE FROM HOUSE TO CURB STOP.
4. WATERMAIN RECORDS TO BE IN ACCORDANCE WITH DGSSMS AND THIS DOCUMENT.

LEGEND:

■ - SIB

● - WATER VALVE
WV

STANDARD AS RECORDED MEASUREMENT FOR WATERMAIN ASSETS

TOWNSHIP OF WILMOT
PUBLIC WORKS AND ENGINEERING DEPARTMENT

DATE: FEBRUARY 2022

SCALE: NTS

DWG No.: WIL-DET-22-22 | REV: 0

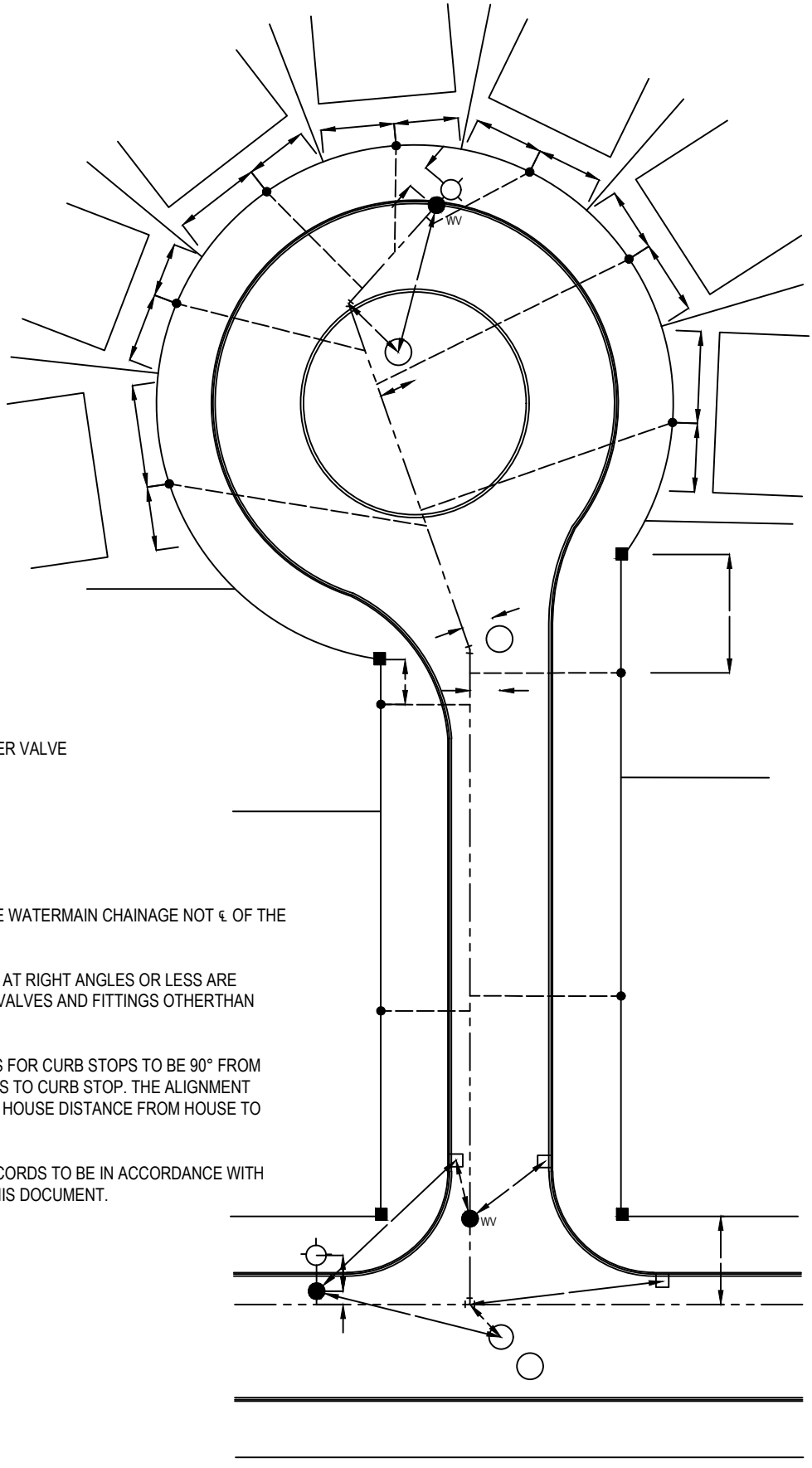

LEGEND:

■ - SIB

● - WATER VALVE
WV

NOTES:

1. CHAINAGE TO BE WATERMAIN CHAINAGE NOT ℄ OF THE ROAD.
2. A MIN. OF 2 TIES AT RIGHT ANGLES OR LESS ARE REQUIRED FOR VALVES AND FITTINGS OTHERTHAN CURB STOPS.
3. MEASUREMENTS FOR CURB STOPS TO BE 90° FROM HOUSE CORNERS TO CURB STOP. THE ALIGNMENT PROJECTION TO HOUSE DISTANCE FROM HOUSE TO CURB STOP.
4. WATERMAIN RECORDS TO BE IN ACCORDANCE WITH DGSSMS AND THIS DOCUMENT.

STANDARD AS RECORDED MEASUREMENT FOR WATERMAIN ASSETS (2)

TOWNSHIP OF WILMOT
PUBLIC WORKS AND ENGINEERING DEPARTMENT

DATE: FEBRUARY 2022

SCALE: NTS

DWG No.: WIL-DET-22-23 | REV: 0

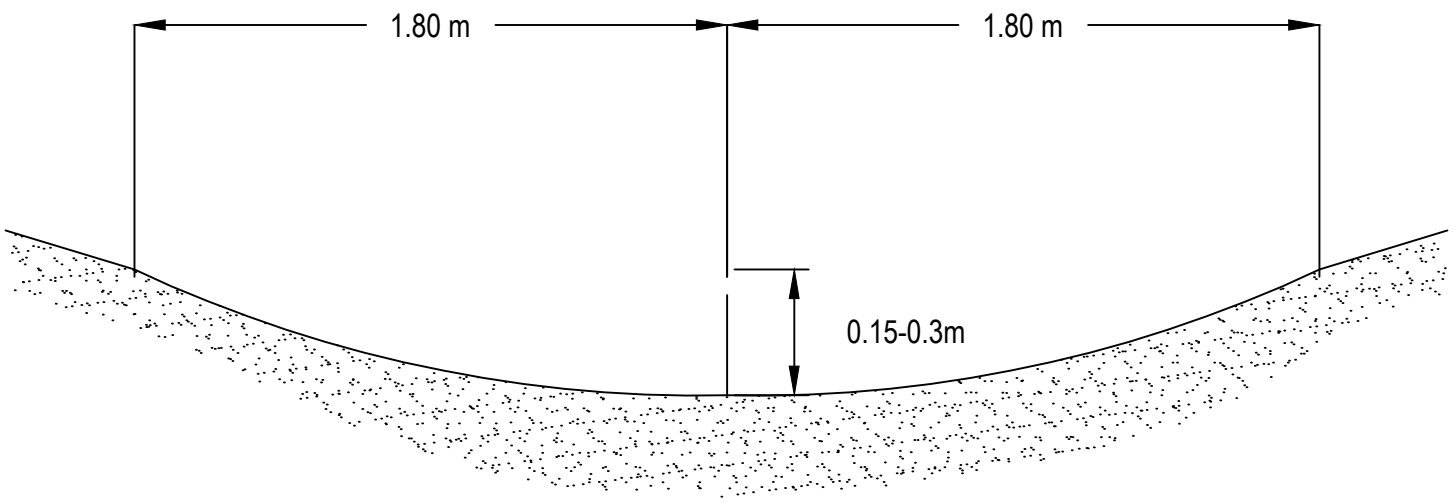

NOTE:

OPTIMUM SIDE SLOPE: 1 VERTICAL TO 6 HORIZONTAL

MAXIMUM SIDE SLOPE: 1 VERTICAL TO 3 HORIZONTAL

MINIMUM GRADIENT: 2%

MAXIMUM GRADIENT: 8%

GRADE TRANSITIONS SHALL BE SMOOTH TO FACILITATE THE MOWING OPERATION

MINIMUM SWALES DEPTH 150 mm

MAXIMUM SWALES DEPTH 300 mm

CROSS SECTION OF GRASS SWALES

TOWNSHIP OF WILMOT
PUBLIC WORKS AND ENGINEERING DEPARTMENT

DATE: **FEBRUARY 2022**

SCALE: **NTS**

DWG No.: **WIL-DET-22-24** | REV: 0

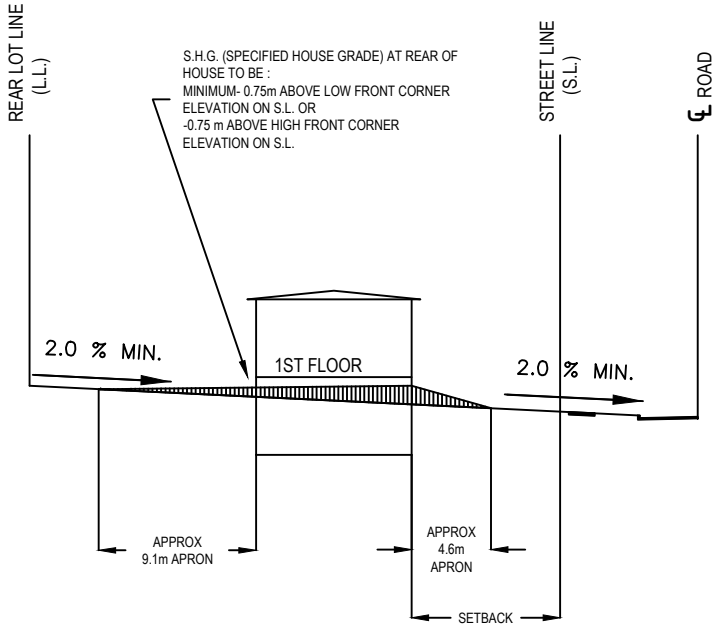

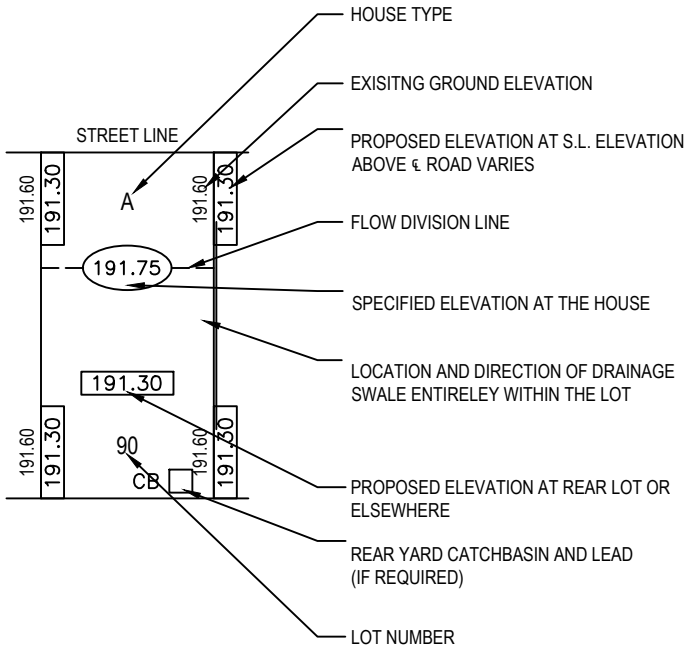

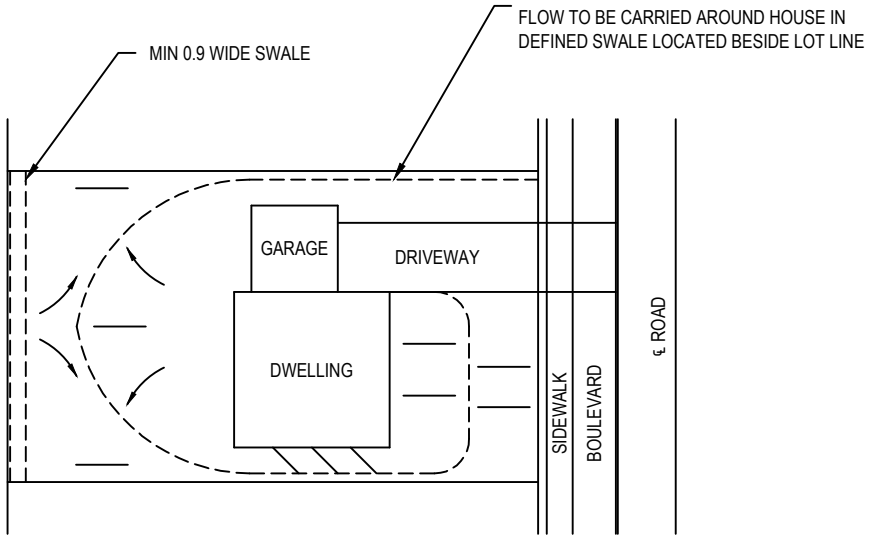

GENERAL NOTES
(FOR ALL GRADING TYPES)

1. DIFFERENCE BETWEEN BUILDING LINE ELEVATION AND SIDE YARD SWALE ELEVATION IS TO BE MIN. 0.15m AND MAX 0.30m ACCORDING TO SIDE YARD WIDTH.
2. ALL SWALES TO BE MIN 2.0%.
3. A MIN 0.3m APRON IS TO BE MAINTINED AGAINST ALL DWELLING UNITS TO ALLOW ACCESS FROM SIDE ENTRANCES TO THE FRONT AND REAR YARDS, 0.3m ACCESS TO BE ON GARAGE SIDE IF NO SIDE DOOR.
4. SLOPES WITHIN LOTS ARE TO HAVE A MAX GRADE OF 3:1. STRUCTURAL RETAINING WALL REQUIRED WHERE MAX. SLOPE EXCEEDED.
5. DIFFERENCE BETWEEN SIDE DOOR SILL AND GROUND ELEVATION TO BE MAX. 0.40m.
6. DIFFERENCE BETWEEN TOP OF FOUNDATION WALL AND BUILDING LINE ELEVATION TO BE MIN 0.15m.
7. A MIN OF 6m OF THE REAR LOT AREA FROM THE BACK OF THE HOUSE SHALL BE GRADED BETWEEN 2% TO A MAX 6%.
8. TYPE "A" AND TYPE "C" LOTS WITH THROUGH DRAINAGE FROM OTHER TYPE LOTS ABUTTING THE REAR LOT LINE ARE TO BE A MIN. OF 12m IN WIDTH.
9. DRIVEWAY GRADES:
   FROM CURB TO STREET LINE: MIN. 2.0% AND MAX. 8.0%

URBAN LOT GRADING TYPE 'A' BACK TO FRONT DRAINAGE

TOWNSHIP OF WILMOT
PUBLIC WORKS AND ENGINEERING DEPARTMENT

DATE: **FEBRUARY 2022**

SCALE: **NTS**

DWG No.: **WIL-DET-22-24** | REV: 0

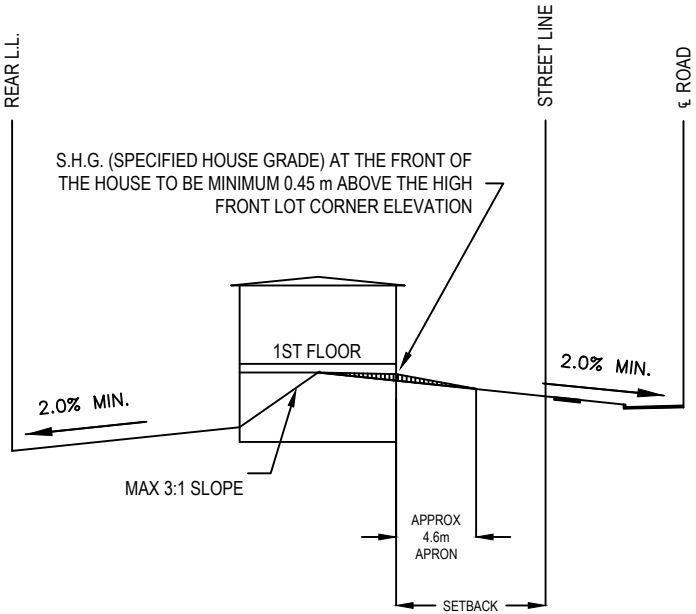

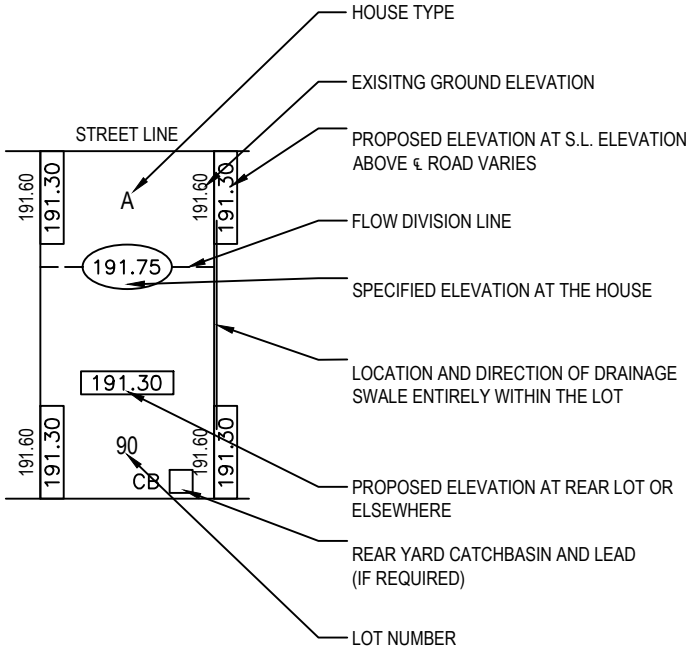

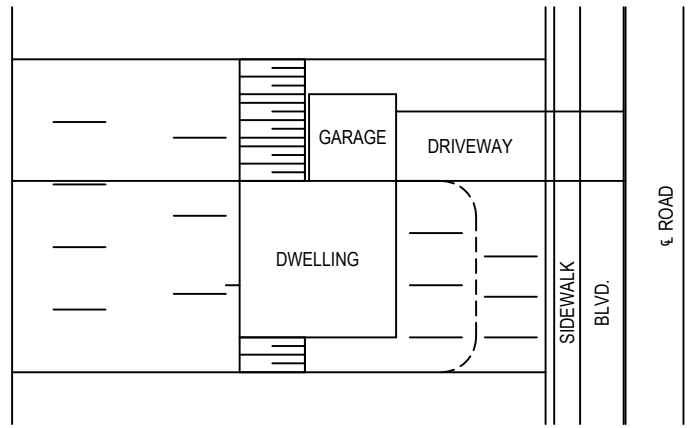

GENERAL NOTES
(FOR ALL GRADING TYPES)

1. DIFFERENCE BETWEEN BUILDING LINE ELEVATION AND SIDE YARD SWALE ELEVATION IS TO BE MIN. 0.15m AND MAX 0.30m ACCORDING TO SIDE YARD WIDTH.
2. ALL SWALES TO BE MIN 2.0% .
3. A MIN 0.3 m APRON IS TO BE MAINTINED AGAINST ALL DWELLING UNITS TO ALLOW ACCESS FROM SIDE ENTRANCES TO THE FRONT AND REAR YARDS, 0.3 m ACCESS TO BE ON GARAGE SIDE IF NO SIDE DOOR.
4. SLOPES WITHIN LOTS ARE TO HAVE A MAX GRADE OF 3:1. STRUCTURAL RETAINING WALL REQUIRED WHERE MAX. SLOPE EXCEEDED.
5. DIFFERENCE BETWEEN SIDE DOOR SILL AND GROUND ELEVATION TO BE MAX. 0.40m.
6. DIFFERENCE BETWEEN TOP OF FOUNDATION WALL AND BUILDING LINE ELEVATION TO BE MIN 0.15m.
7. A MIN OF 6m OF THE REAR LOT AREA FROM THE BACK OF THE HOUSE SHALL BE GRADED BETWEEN 2% TO A MAX 6%.
8. TYPE "A" AND TYPE "C" LOTS WITH THROUGH DRAINAGE FROM OTHER TYPE LOTS ABUTTING THE REAR LOT LINE ARE TO BE A MIN. OF 12m IN WIDTH.
9. DRIVEWAY GRADES:
   FROM CURB TO STREET LINE: MIN. 2.0% AND MAX. 8.0%

URBAN LOT GRADING TYPE 'B'
SPLIT DRAINAGE WITH WALKOUT

TOWNSHIP OF WILMOT
PUBLIC WORKS AND ENGINEERING DEPARTMENT

DATE: **FEBRUARY 2022**

SCALE: **NTS**

DWG No.: **WIL-DET-22-26** | REV: 0

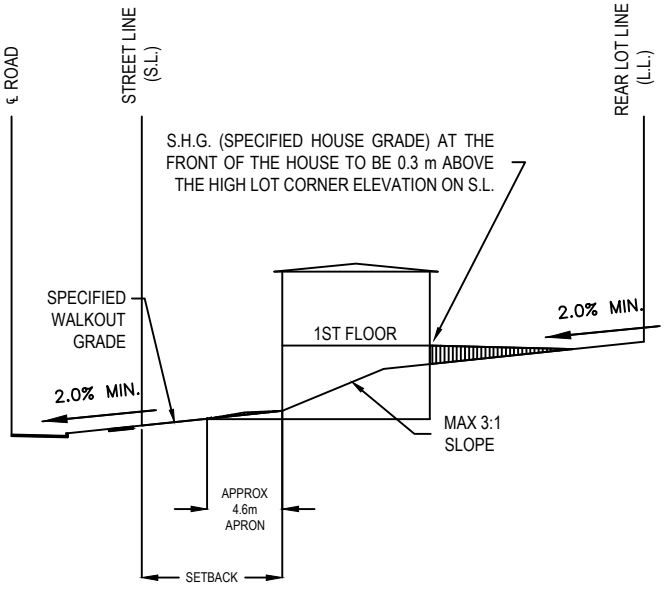

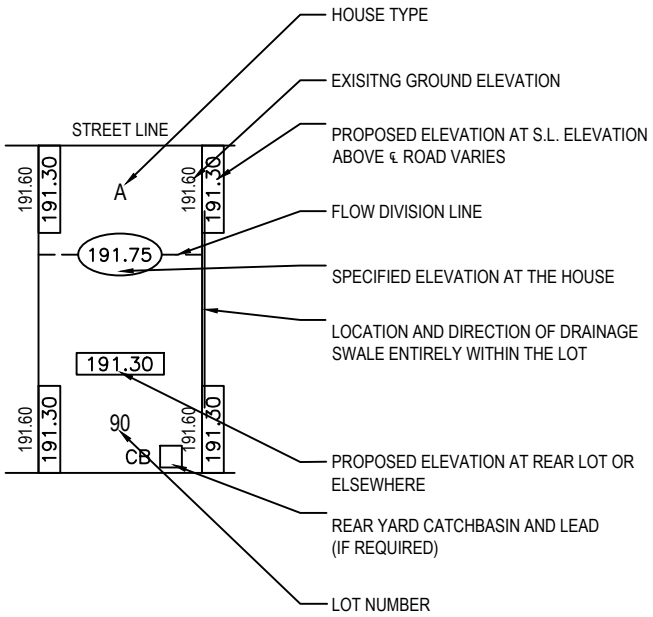

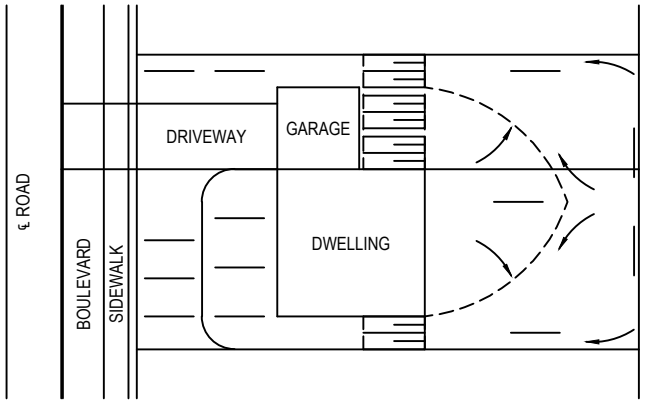

GENERAL NOTES
(FOR ALL GRADING TYPES)

1. DIFFERENCE BETWEEN BUILDING LINE ELEVATION AND SIDE YARD SWALE ELEVATION IS TO BE MIN. 0.15m AND MAX 0.30m ACCORDING TO SIDE YARD WIDTH.
2. ALL SWALES TO BE MIN 2.0%.
3. A MIN 0.3 m APRON IS TO BE MAINTINED AGAINST ALL DWELLING UNITS TO ALLOW ACCESS FROM SIDE ENTRANCES TO THE FRONT AND REAR YARDS, 0.3 m ACCESS TO BE ON GARAGE SIDE IF NO SIDE DOOR.
4. SLOPES WITHIN LOTS ARE TO HAVE A MAX GRADE OF 3:1. STRUCTURAL RETAINING WALL REQUIRED WHERE MAX. SLOPE EXCEEDED.
5. DIFFERENCE BETWEEN SIDE DOOR SILL AND GROUND ELEVATION TO BE MAX. 0.40m.
6. DIFFERENCE BETWEEN TOP OF FOUNDATION WALL AND BUILDING LINE ELEVATION TO BE MIN 0.15m.
7. A MIN OF 6m OF THE REAR LOT AREA FROM THE BACK OF THE HOUSE SHALL BE GRADED BETWEEN 2% TO A MAX 6%.
8. TYPE "A" AND TYPE "C" LOTS WITH THROUGH DRAINAGE FROM OTHER TYPE LOTS ABUTTING THE REAR LOT LINE ARE TO BE A MIN. OF 12m IN WIDTH.
9. DRIVEWAY GRADES:
   FROM CURB TO STREET LINE: MIN. 2.0% AND MAX. 8.0%

URBAN LOT GRADING TYPE 'C'
BACK TO FRONT WITH WALKOUT

TOWNSHIP OF WILMOT
PUBLIC WORKS AND ENGINEERING DEPARTMENT

DATE: **FEBRUARY 2022**

SCALE: **NTS**

DWG No.: **WIL-DET-22-27** | REV: 0

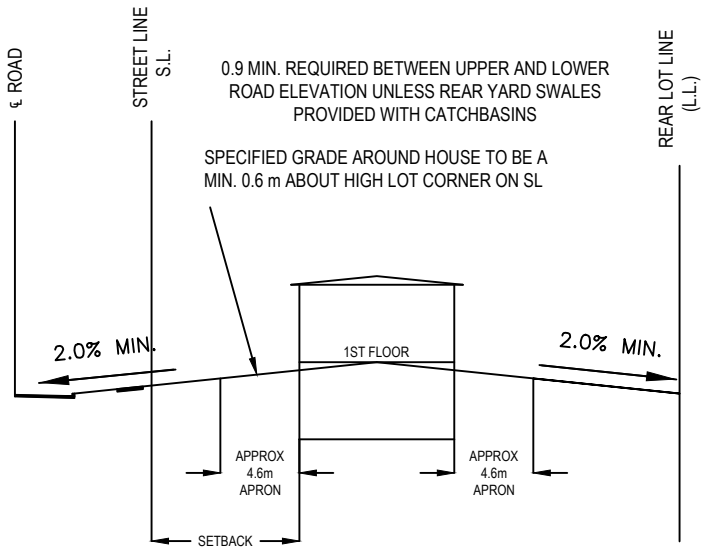

MIN. 0.15m PROTECTIVE APRON AROUND HOUSE SLOPING AWAY FROM HOUSE

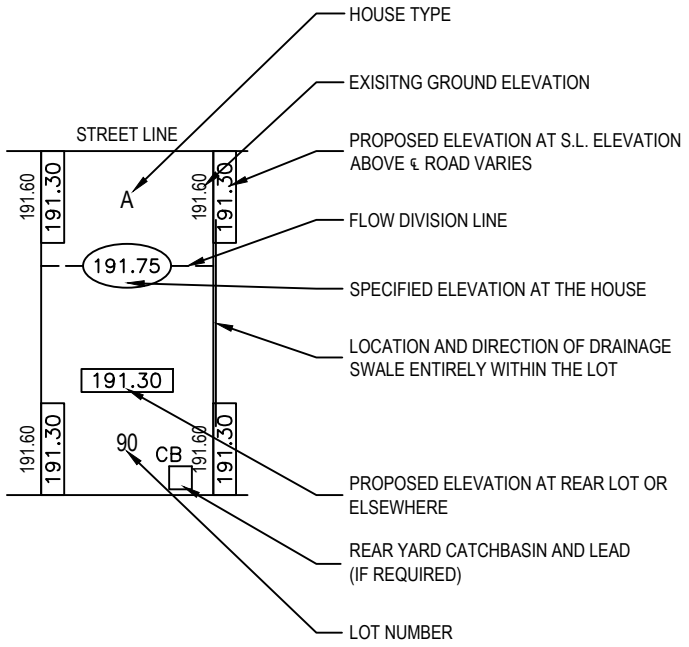

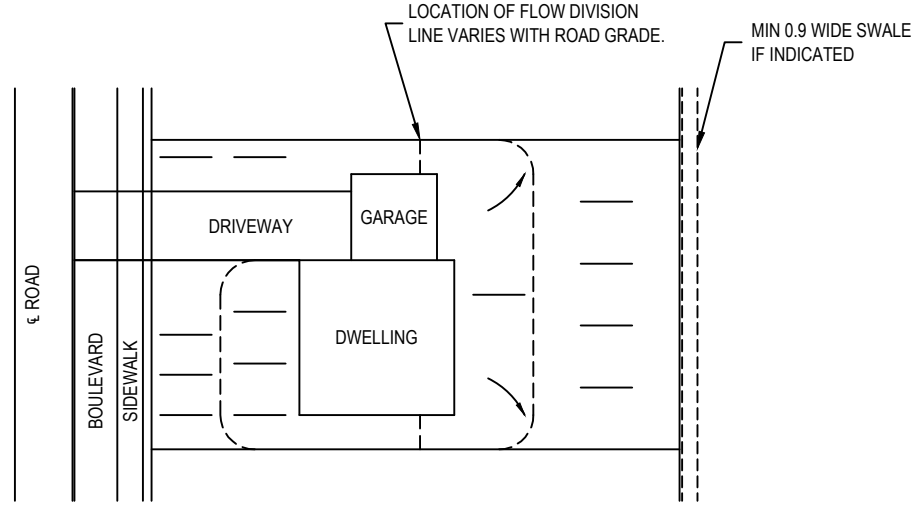

GENERAL NOTES

(FOR ALL GRADING TYPES)

1. DIFFERENCE BETWEEN BUILDING LINE ELEVATION AND SIDE YARD SWALE ELEVATION IS TO BE MIN. 0.15m AND MAX 0.30m ACCORDING TO SIDE YARD WIDTH.
2. ALL SWALES TO BE MIN 2.0%.
3. A MIN 0.3m APRON IS TO BE MAINTINED AGAINST ALL DWELLING UNITS TO ALLOW ACCESS FROM SIDE ENTRANCES TO THE FRONT AND REAR YARDS, 0.3m ACCESS TO BE ON GARAGE SIDE IF NO SIDE DOOR.
4. SLOPES WITHIN LOTS ARE TO HAVE A MAX GRADE OF 3:1. STRUCTURAL RETAINING WALL REQUIRED WHERE MAX. SLOPE EXCEEDED.
5. DIFFERENCE BETWEEN SIDE DOOR SILL AND GROUND ELEVATION TO BE MAX. 0.40m.
6. DIFFERENCE BETWEEN TOP OF FOUNDATION WALL AND BUILDING LINE ELEVATION TO BE MIN 0.15m.
7. A MIN OF 6m OF THE REAR LOT AREA FROM THE BACK OF THE HOUSE SHALL BE GRADED BETWEEN 2% TO A MAX 6%.
8. TYPE "A" AND TYPE "C" LOTS WITH THROUGH DRAINAGE FROM OTHER TYPE LOTS ABUTTING THE REAR LOT LINE ARE TO BE A MIN. OF 12m IN WIDTH.
9. DRIVEWAY GRADES:
   FROM CURB TO STREET LINE: MIN. 2.0% AND MAX. 8.0%

URBAN LOT GRADING TYPE 'D' SPLIT DRAINAGE

TOWNSHIP OF WILMOT
PUBLIC WORKS AND ENGINEERING DEPARTMENT

DATE: **FEBRUARY 2022**

SCALE: **NTS**

DWG No.: **WIL-DET-22-28** | REV: 0

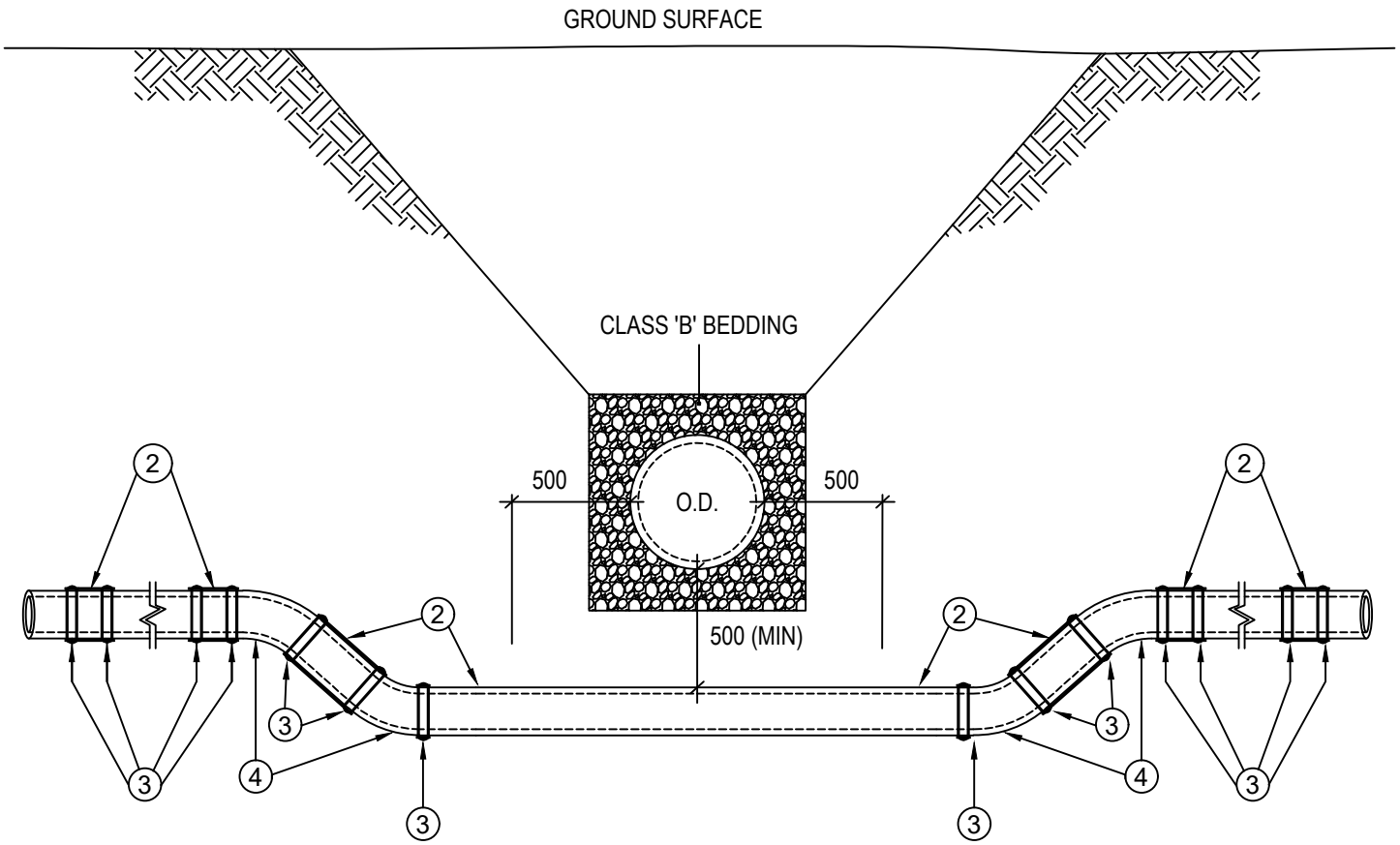

NOTES:

1. ALL DIMENSIONS ARE IN mm EXCEPT AS NOTED.
2. THREADED TIE RODS - TOP AND BOTTOM 19mmØ AND LENGTH AS REQUIRED PER MANUFACTURER STANDARDS AND/OR DGSSMS.
3. RETENTION CLAMPS - REQUIRED AT FIRST JOINT ON BOTH SIDES OF OFFSET AS PER MANUFACTURER STANDARDS AND/OR DGSSMS.
4. MANUFACTURED BENDS - MUST BE USED TO OBTAIN THE DESIRED ANGLES OF DEFLECTION.
5. ANODES, PETROLEUM TAPE AND TRACER WIRE TO BE INSTALLED AS PER DGSSMS.
6. AS RECORDED DETAILS/SURVEY SHOTS TO BE PROVIDED AT ALL WATERMAIN CROSSINGS.
7. CROSSING TO MEET MOECP PROCEDURE.

TYPICAL WATERMAIN OFFSET UNDER SEWERS

TOWNSHIP OF WILMOT
PUBLIC WORKS AND ENGINEERING DEPARTMENT

DATE: FEBRUARY 2022

SCALE: NTS

DWG No.: WIL-DET-22-29 | REV: 0

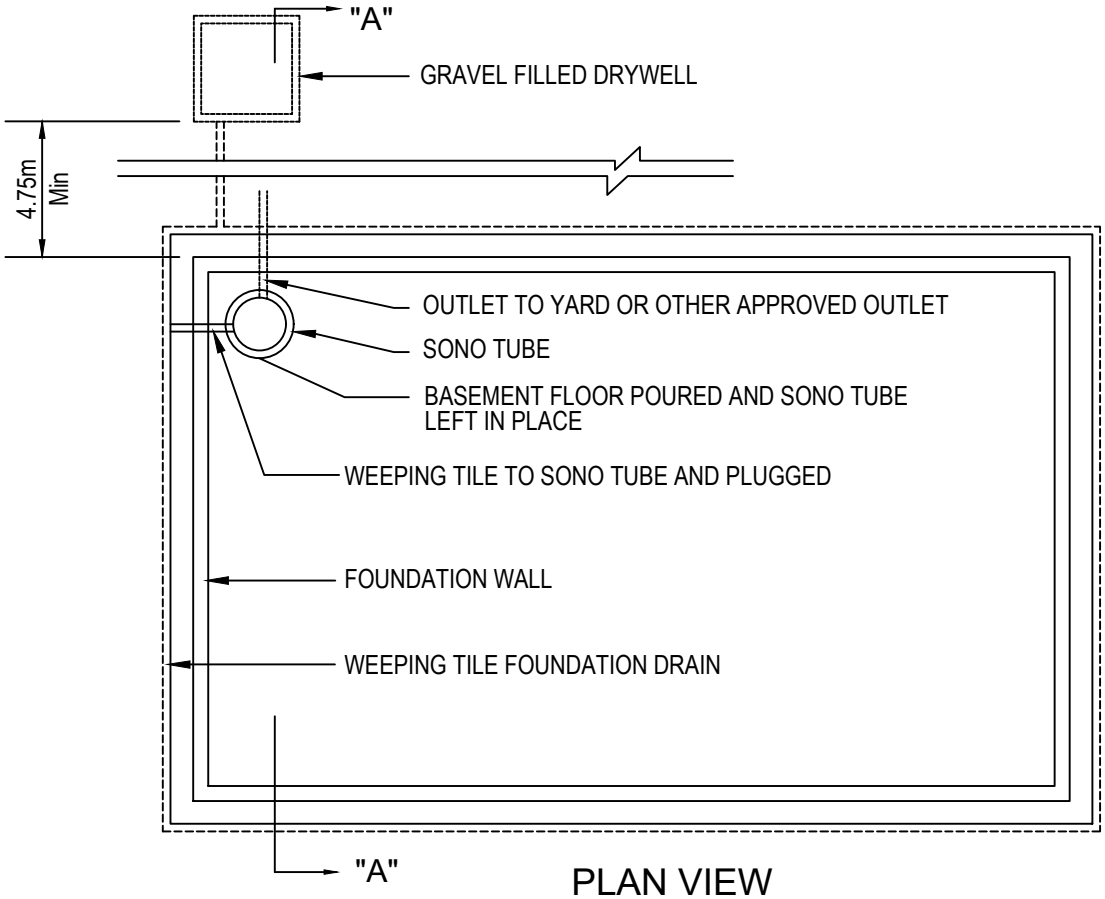

PLAN VIEW

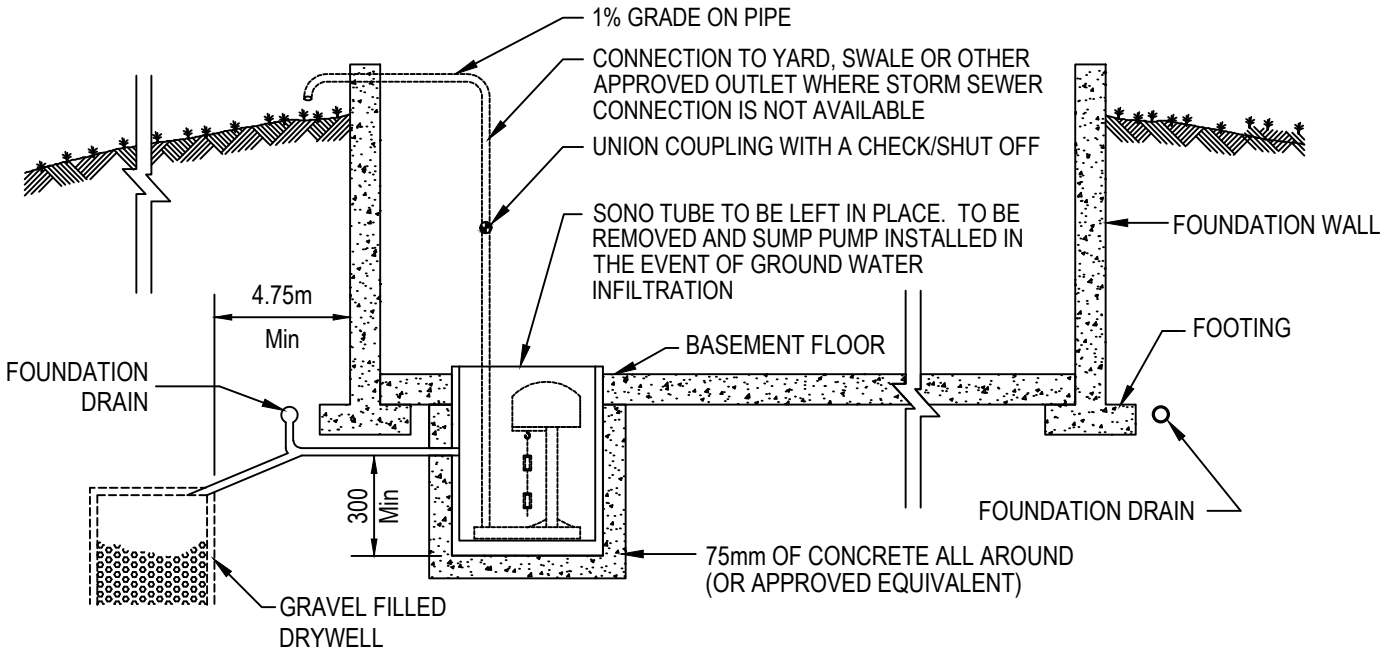

SECTION "A" - "A"

NOTES:

1. ALL DIMENSIONS ARE IN mm EXCEPT AS NOTED.
2. DRYWELL TO BE LOCATED IN THE FRONT OR REAR YARD DEPENDING ON WHICH IS LOWEST IN RELATION TO THE BASEMENT FLOOR ELEVATION.
3. DRYWELL TO BE USED WHERE SOILS ARE APPROPIATE.

WEEPING TILE CONNECTION in MINIMUM GROUND WATER AREAS

TOWNSHIP OF WILMOT
PUBLIC WORKS AND ENGINEERING DEPARTMENT

DATE: FEBRUARY 2022

SCALE: NTS

DWG No.: WIL-DET-22-30 | REV: 0

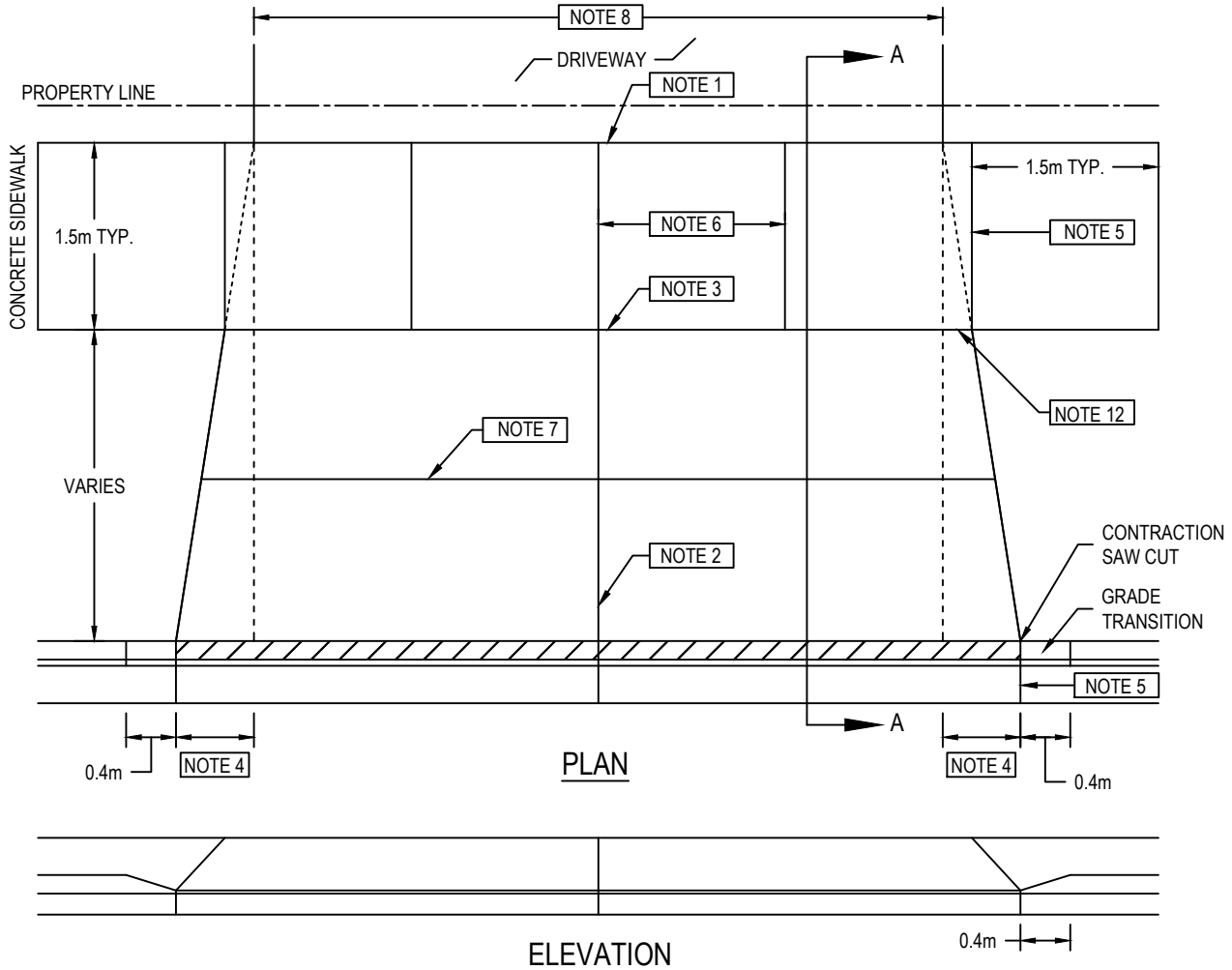

PLAN

ELEVATION

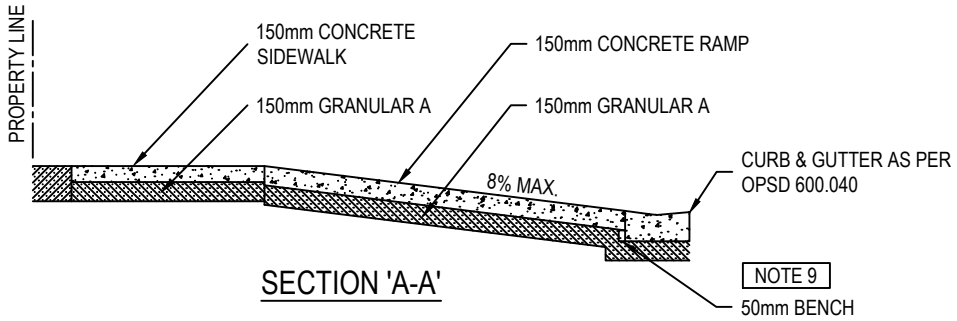

SECTION 'A-A'

GENERAL NOTES:

1. IF THE DRIVEWAY IS CONCRETE, EXPANSION JOINT MATERIAL SHALL BE INSTALLED AT THE BACK OF THE SIDEWALK.
2. SAW CUTS SHALL BE PLACED AT THE CENTRELINE OF THE DRIVEWAY RAMP AND EXTENDED THROUGH THE SIDEWALK AND CURB.
3. EXCEPT IN NEW DEVELOPMENT, DRIVEWAY RAMPS MAY BE POURED MONOLITHICALLY WITH THE ADJACENT SIDEWALK, IN WHICH CASE TOOLED SAW CUT JOINTS SHALL BE PLACED ALONG THE FRONT EDGE OF THE SIDEWALK, ACROSS THE DRIVEWAY ENTRANCE, WHERE BOULEVARD IS LESS THAN 1.5m.
4. THE DISTANCE ALONG THE CURB FROM THE EXTENDED EDGE OF THE DRIVEWAY AT THE BACK OF THE SIDEWALK TO THE BOTTOM OF THE DEPRESSED CURB SHALL BE 1/4 OF THE DISTANCE FROM THE BACK OF CURB TO THE FRONT OF SIDEWALK TO A MAXIMUM OF 1000mm, BUT SHALL NOT BE LESS THAN 500mm. NEW DEVELOPMENT SHALL BE 0.3m.
5. SAW CUTS SHALL BE PLACED IN THE SIDEWALK WHERE THE DRIVEWAY RAMP TAPER INTERSECTS AND IN THE CURB AT THE BOTTOM OF GRADE TRANSITION.
6. TOOLED JOINTS IN THE DRIVEWAY PORTION OF THE SIDEWALK SHALL BE SPACED EQUALLY TO MATCH THE TYPICAL JOINTING OF SIDEWALK AS CLOSE AS POSSIBLE.
7. WHERE DRIVEWAY RAMP WIDTH EXCEEDS 3000mm, A LONGITUDINAL SAW CUT JOINT IS TO BE PROVIDED AT THE MID-POINT.
8. ALLOWABLE RAMP WIDTHS AT THE SIDEWALK ARE BETWEEN 3.65m AND 6.0m.
9. DEPRESSED CURB AND GUTTER AT DRIVEWAY ENTRANCES SHALL HAVE AN ADDITIONAL 50mm BENCH TO SUPPORT ADJACENT CONCRETE RAMPS, REFER TO OPSD 600.040.
10. REFER TO OPSD 350.010 FOR COMMERCIAL/INDUSTRIAL RAMP DESIGN.
11. REFER TO TOWNSHIP OF WILMOT STANDARD SPECIFICATIONS AND INFRASTRUCTURE MANUAL FOR FURTHER INFORMATION.
12. FOR NEW DEVELOPMENT, RAMP WIDTH AT FRONT OF SIDEWALK IS TO EQUAL THE WIDTH OF THE DRIVEWAY AT THE BACK OF SIDEWALK.

STANDARD DROP CURB & CONCRETE DRIVEWAY RAMP

TOWNSHIP OF WILMOT
PUBLIC WORKS AND ENGINEERING DEPARTMENT

DATE: FEBRUARY 2022

SCALE: NTS

DWG No.: WIL-DET-22-31 | REV: 0

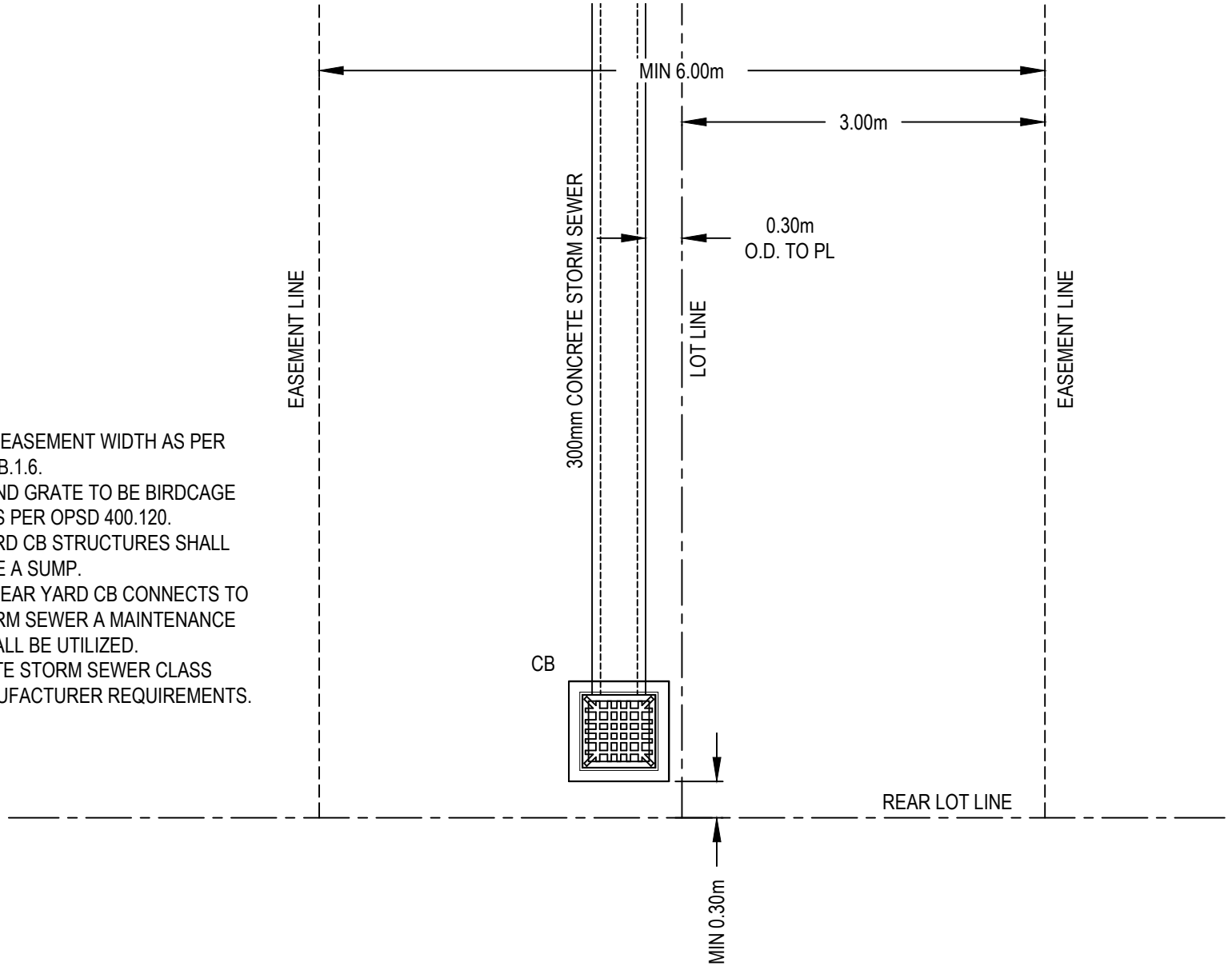

NOTE:

1. MINIMUM EASEMENT WIDTH AS PER DGSSMS B.1.6.
2. FRAME AND GRATE TO BE BIRDCAGE GRATE AS PER OPSD 400.120.
3. REAR YARD CB STRUCTURES SHALL NOT HAVE A SUMP.
4. WHERE REAR YARD CB CONNECTS TO THE STORM SEWER A MAINTENANCE HOLE SHALL BE UTILIZED.
5. CONCRETE STORM SEWER CLASS PER MANUFACTURER REQUIREMENTS.

STORM SEWER EASEMENT DETAIL

TOWNSHIP OF WILMOT
PUBLIC WORKS AND ENGINEERING DEPARTMENT

DATE: FEBRUARY2022

SCALE: NTS

DWG No.: WIL-DET-22-32 | REV: 0

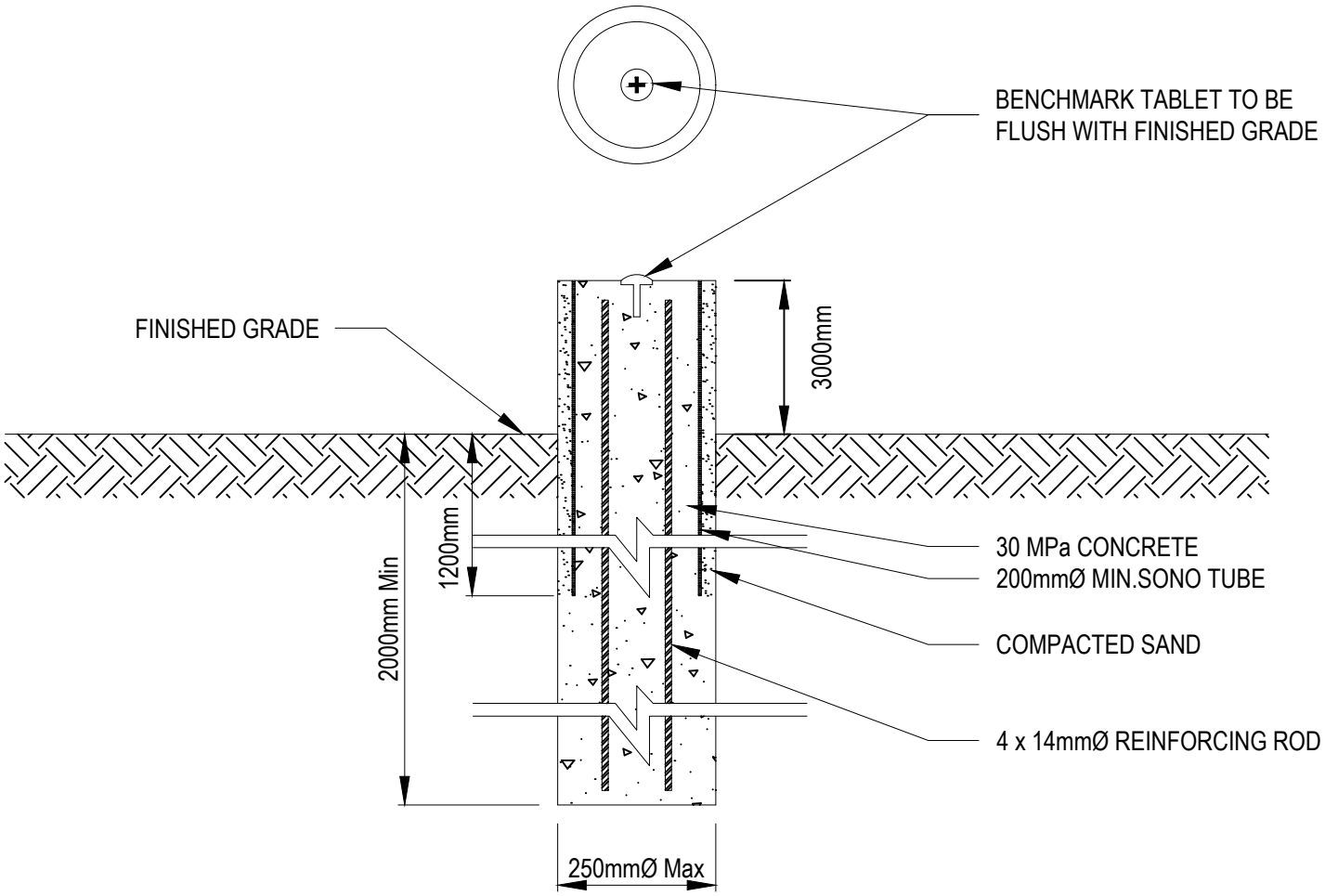

NOTES:

1. A MINIMUM OF FOUR (4) CONTROL POINTS WILL BE LEFT ON SITE.
2. BENCHMARK MONUMENTS AT A MINIMUM 100m INTERVALS.
3. THIS DETAIL IS TO BE READ IN CONJUNCTION WITH SURVEY REQUIREMENTS SECTION OF THE INFRASTRUCTURE MANUAL FOR ADDITIONAL DETAILS AND REQUIREMENTS.

BENCHMARK MONUMENT

TOWNSHIP OF WILMOT
PUBLIC WORKS AND ENGINEERING DEPARTMENT

DATE: FEBRUARY 2022

SCALE: NTS

DWG No.: WIL-DET-22-33 | REV: 0

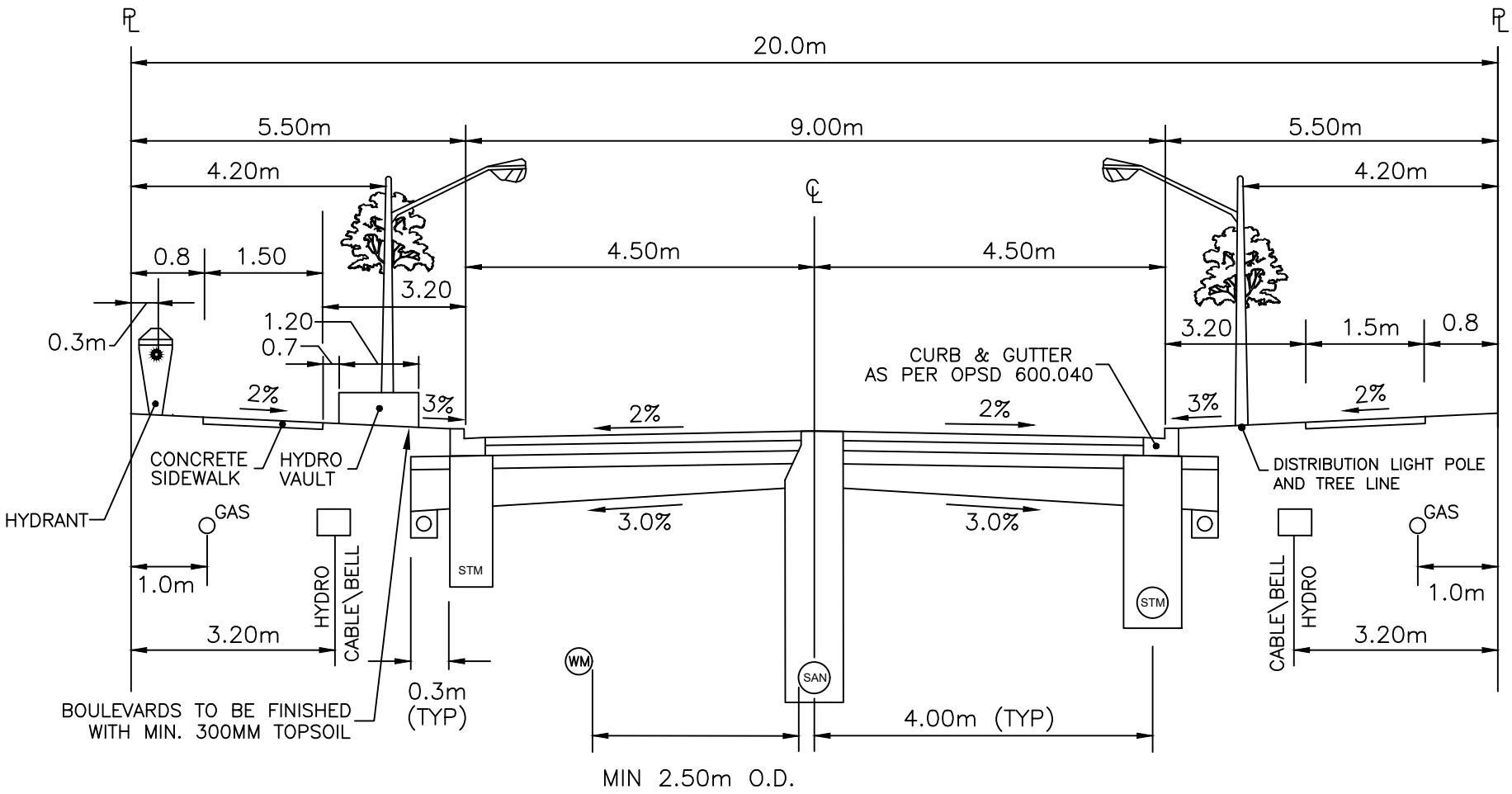

NOTES:

1. ALL DIMENSION IN METERS.(UNLESS NOTED)
2. SUBDRAIN SHALL BE 150mm PERFORATED PIPE c/w SOCK AND MASONARY SAND (TYP.)
3. MINIMUM DEPTH OF COVER

STORM SEWER	1.50m
SANITARY SEWER	2.80m
WATERMAIN	2.00m
GAS MAIN	0.75m IN BLVD.
HYDRO/BELL/CABLE	1.00m IN BLVD.

4. CURB STOP VALVES AT PROPERTY LINE (PREFERRED LOCATION OUT OF DRIVEWAY)
5. HYDRANT VALVES LOCATED 0.50m BEHIND CURB
6. MINIMUM DEPTH OF COVER FOR SERVICE LATERALS AT PROPERTY LINE.

STORM SERVICE	1.30m
SANITARY SERVICE	2.50m
WATER SERVICE	1.80m

7. THE FOLLOWING IS A MINIMUM ROAD BASE AND WILL REQUIRE A SOILS REPORT VERIFICATIONS TO DERMINE IF ADDITIONAL THICKNESS IS REQUIRED.
   - 40mm HL3
   - 100mm HL4
   - 200mm GRANULAR 'A'
   - 600mm GRANULAR 'B'

20.0m LOCAL ROAD ROW

TOWNSHIP OF WILMOT
PUBLIC WORKS AND ENGINEERING DEPARTMENT

DATE: FEBRUARY 2022

SCALE: N.T.S.

DWG No.: WIL-DET-22-34 | REV: 0

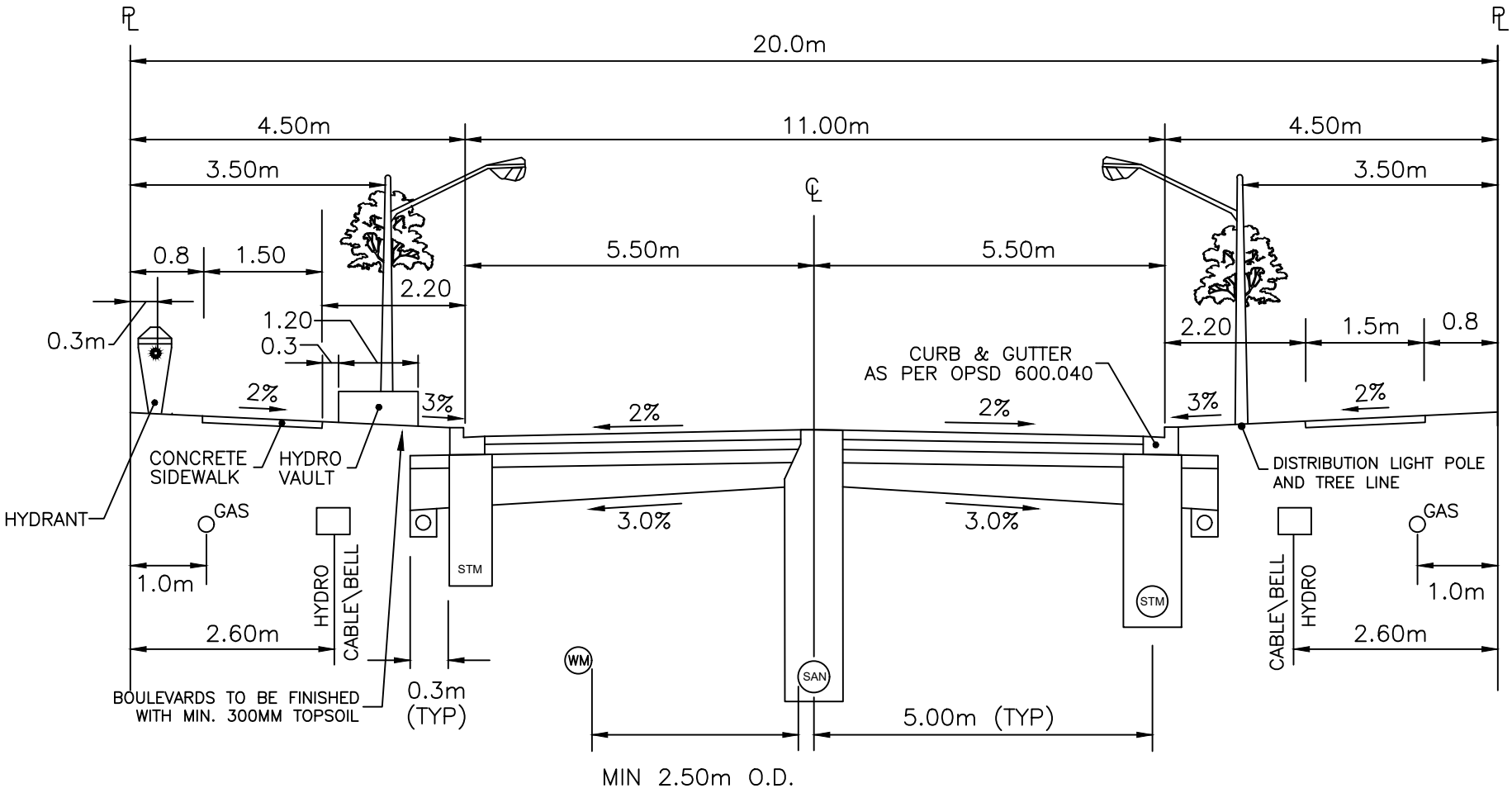

NOTES:

1. ALL DIMENSION IN METERS.(UNLESS NOTED)
2. SUBDRAIN SHALL BE 150mm PERFORATED PIPE c/w SOCK AND MASONARY SAND (TYP.)
3. MINIMUM DEPTH OF COVER

STORM SEWER	1.50m
SANITARY SEWER	2.80m
WATERMAIN	2.00m
GAS MAIN	0.75m IN BLVD.
HYDRO/BELL/CABLE	1.00m IN BLVD.

4. CURB STOP VALVES AT PROPERTY LINE (PREFERRED LOCATION OUT OF DRIVEWAY)
5. HYDRANT VALVES LOCATED 0.50m BEHIND CURB
6. MINIMUM DEPTH OF COVER FOR SERVICE LATERALS AT PROPERTY LINE.

STORM SERVICE	1.30m
SANITARY SERVICE	2.50m
WATER SERVICE	1.80m

7. THE FOLLOWING IS A MINIMUM ROAD BASE AND WILL REQUIRE A SOILS REPORT VERIFICATIONS TO DERMINE IF ADDITIONAL THICKNESS IS REQUIRED.
   - 50mm HL3
   - 100mm HL4
   - 200mm GRANULAR 'A'
   - 600mm GRANULAR 'B'

20.0m MINOR COLLECTOR ROW

TOWNSHIP OF WILMOT
PUBLIC WORKS AND ENGINEERING DEPARTMENT

DATE: FEBRUARY 2022

SCALE: N.T.S.

DWG No.: WIL-DET-22-35 | REV: 0

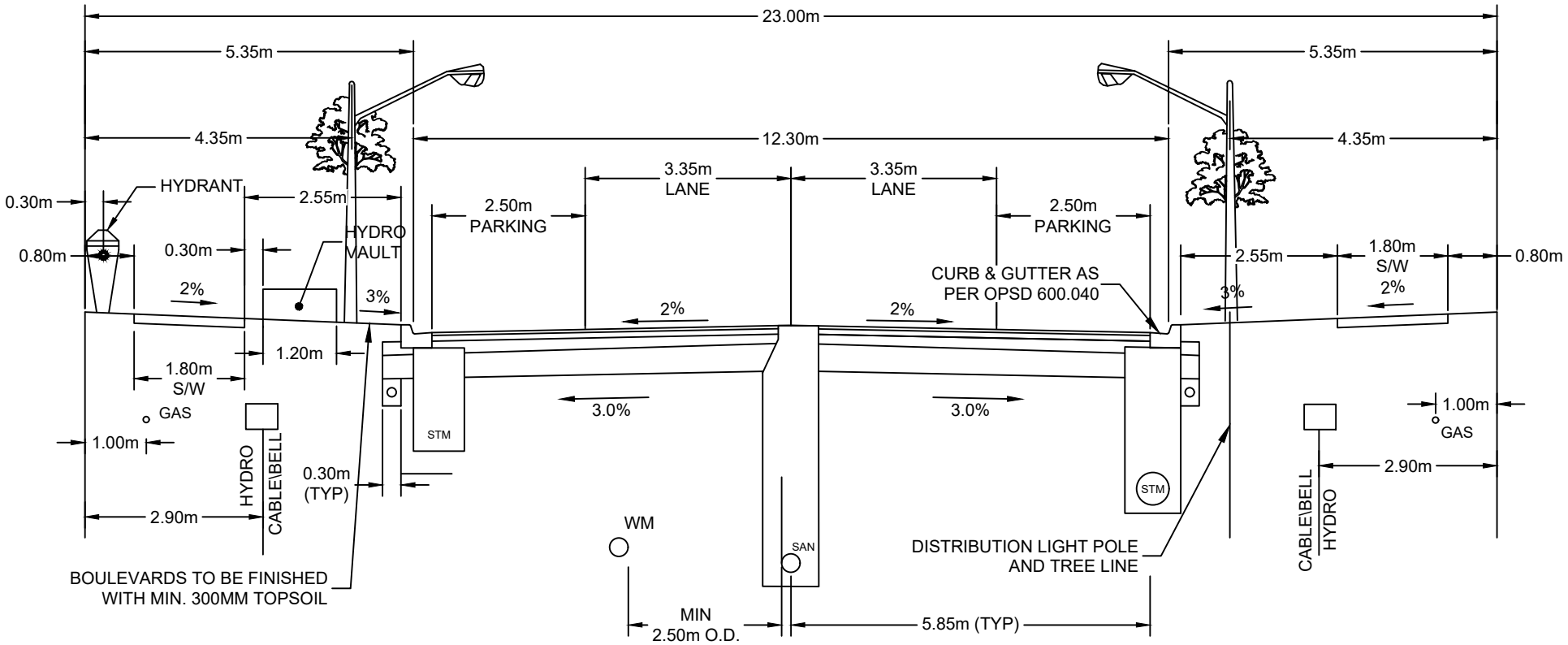

NOTES:

1. ALL DIMENSION IN METERS (UNLESS NOTED).
2. SUBDRAIN SHALL BE 150mm PERFORATED PIPE c/w SOCK AND FINE AGGERGATE BEDDING PER OPSS 1002.
3. MINIMUM DEPTH OF COVER

STORM SEWER	1.50m
SANITARY SEWER	2.80m
WATERMAIN	2.00m
GAS MAIN	0.75m IN BLVD.
HYDRO/BELL/CABLE	1.00m IN BLVD.

4. CURB STOP VALVES AT PROPERTY LINE (PREFERRED LOCATION OUT OF DRIVEWAY, IF LOCATED IN DRIVEWAY REFER TO TOWNSHIP OF WOOLWICH FROST COLLAR DETAIL)
5. HYDRANT VALVES LOCATED 0.50m BEHIND CURB
6. MINIMUM DEPTH OF COVER FOR SERVICE LATERALS AT PROPERTY LINE.

STORM SERVICE	1.30m
SANITARY SERVICE	2.50m
WATER SERVICE	1.80m

7. THE FOLLOWING IS A MINIMUM ROAD BASE AND WILL REQUIRE A SOILS REPORT VERIFICATIONS TO DERMINE IF ADDITIONAL THICKNESS IS REQUIRED.
   - 50mm HL3
   - 100mm HL4
   - 200mm GRANULAR 'A'
   - 600mm GRANULAR 'B'

23.0m URBAN COLLECTOR ROAD R.O.W. CROSS SECTION

TOWNSHIP OF WILMOT
PUBLIC WORKS AND ENGINEERING DEPARTMENT

DATE: FEBRUARY 2022

SCALE: NTS

DWG No.: WIL-DET-22-36 | REV: 0

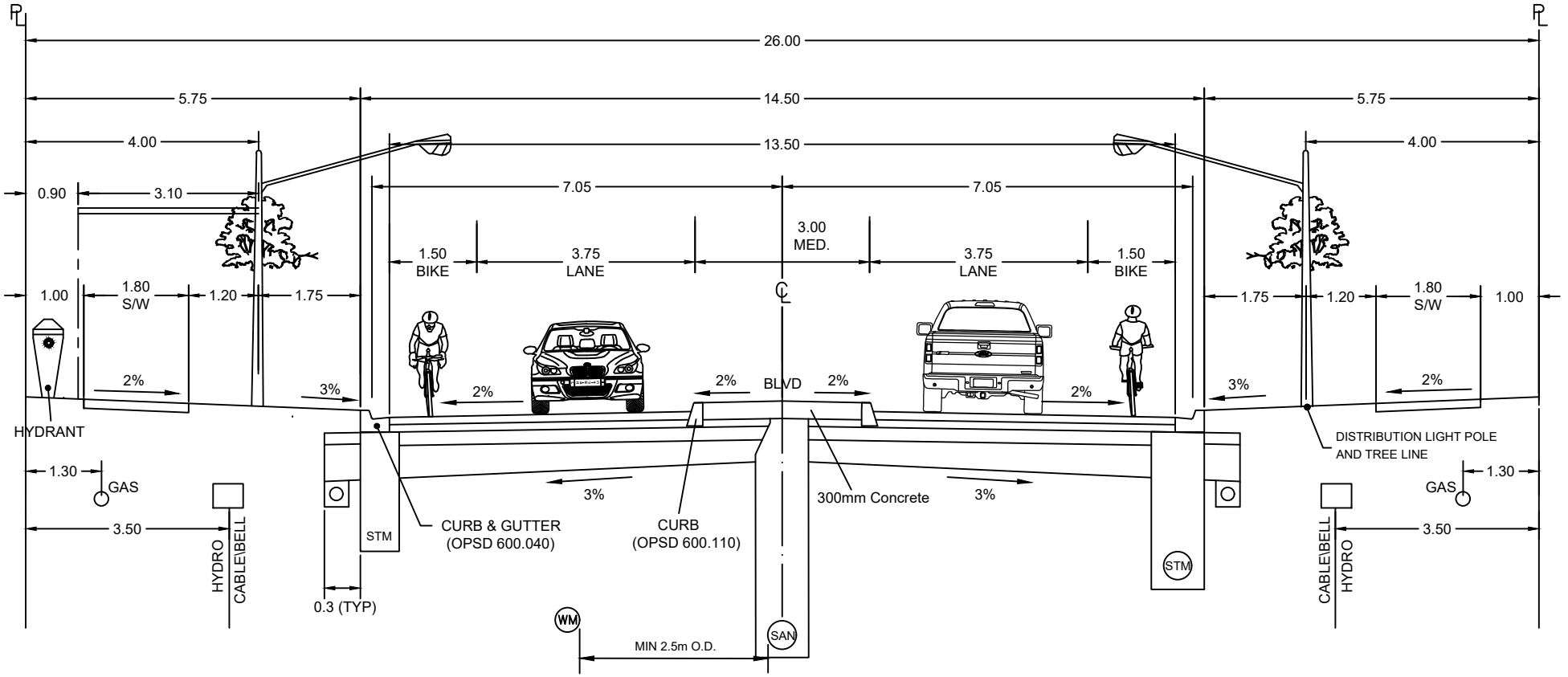

NOTES:

1. ALL DIMENSION IN METRES.(UNLESS NOTED)
2. SUBDRAIN SHALL BE 150mm PERFORATED PIPE c/w SOCK AND MASONARY SAND (TYP.)
3. MINIMUM DEPTH OF COVER

STORM SEWER	1.50m
SANITARY SEWER	2.80m
WATERMAIN	2.00m
GAS MAIN	0.75m IN BLVD.
HYDRO/BELL/CABLE	1.00m IN BLVD.

4. CURB STOP VALVES AT PROPERTY LINE (PREFERRED LOCATION OUT OF DRIVEWAY)
5. HYDRANT VALVES LOCATED 0.50m BEHIND CURB
6. MINIMUM DEPTH OF COVER FOR SERVICE LATERALS AT PROPERTY LINE.

STORM SERVICE	1.30m
SANITARY SERVICE	2.50m
WATER SERVICE	1.80m

7. THE FOLLOWING IS A MINIMUM ROAD BASE AND WILL REQUIRE A SOILS REPORT VERIFICATIONS TO DERMINE IF ADDITIONAL THICKNESS IS REQUIRED.

50mm HL3
100mm HL4
200mm GRANULAR 'A'
600mm GRANULAR 'B'

26.0m MAJOR COLLECTOR ROW

TOWNSHIP OF WILMOT
PUBLIC WORKS AND ENGINEERING DEPARTMENT

DATE: FEBRUARY 2022

SCALE: N.T.S.

DWG No.: WIL-DET-22-37 | REV: 0

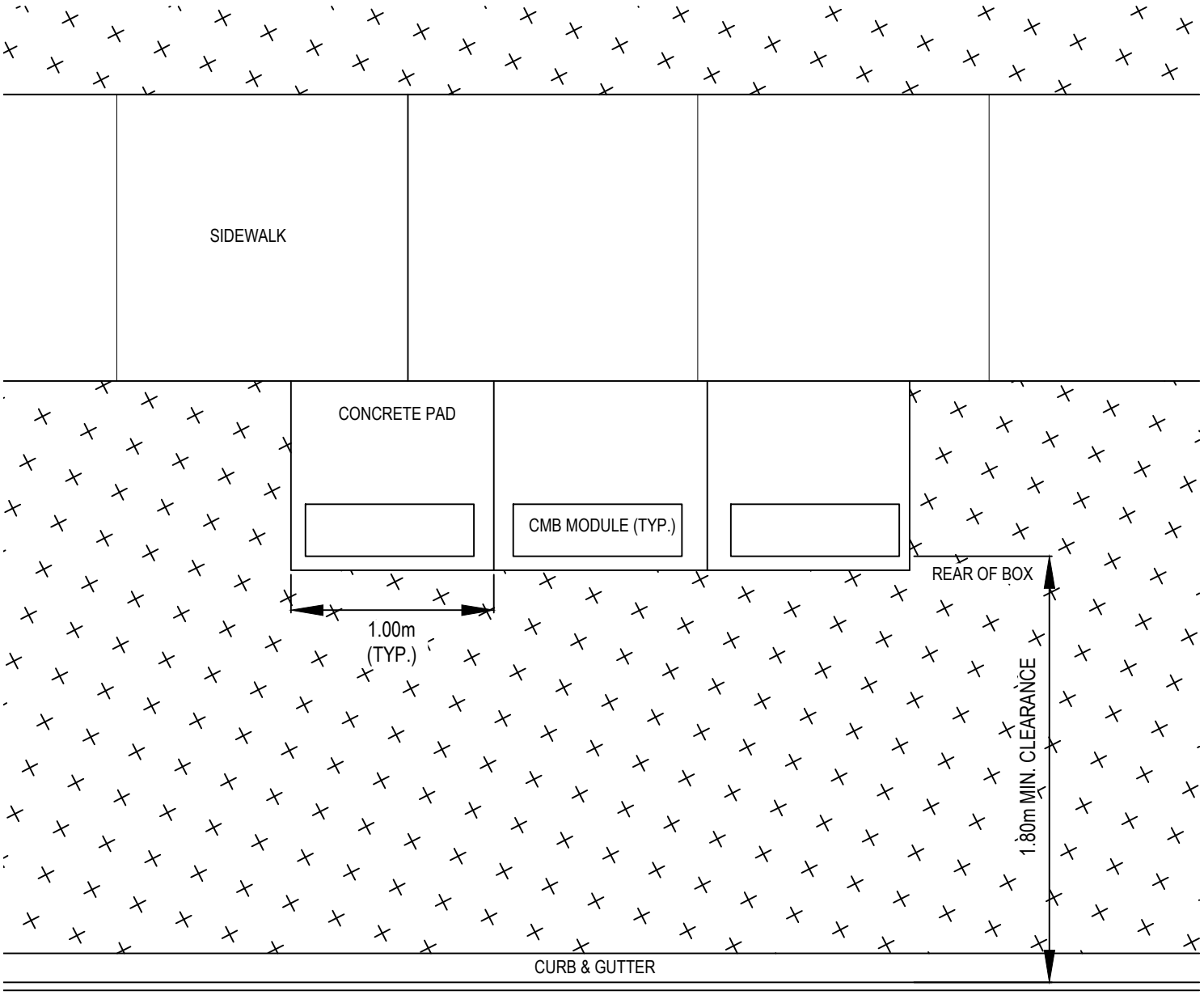

NOTES:

1. ALL UNDGERGROUND UTILITIES TO BE LOCATED BEFORE ANY EXCAVATION IS PERMITTED. IN THE EVENT OF ANY UTILITIES PRESENT, GUIDANCE MUST BE FOLLOWED.
2. ALL DIMENSIONS ARE IN METRES UNLESS OTHERWISE STATED.
3. DRAINAGE MUST BE DIRECTED AWAY FROM ACCESS AND PAD. WATER CAN NOT POOL AT SITE.
4. MAILBOX INSTALLATION AS PER CANADA POST STANDARDS.

COMMUNITY MAILBOX (CMB) DETAIL

TOWNSHIP OF WILMOT
PUBLIC WORKS AND ENGINEERING DEPARTMENT

DATE: FEBRUARY 2022

SCALE: NTS

DWG No.: WIL-DET-22-38 | REV: 0

PLAN

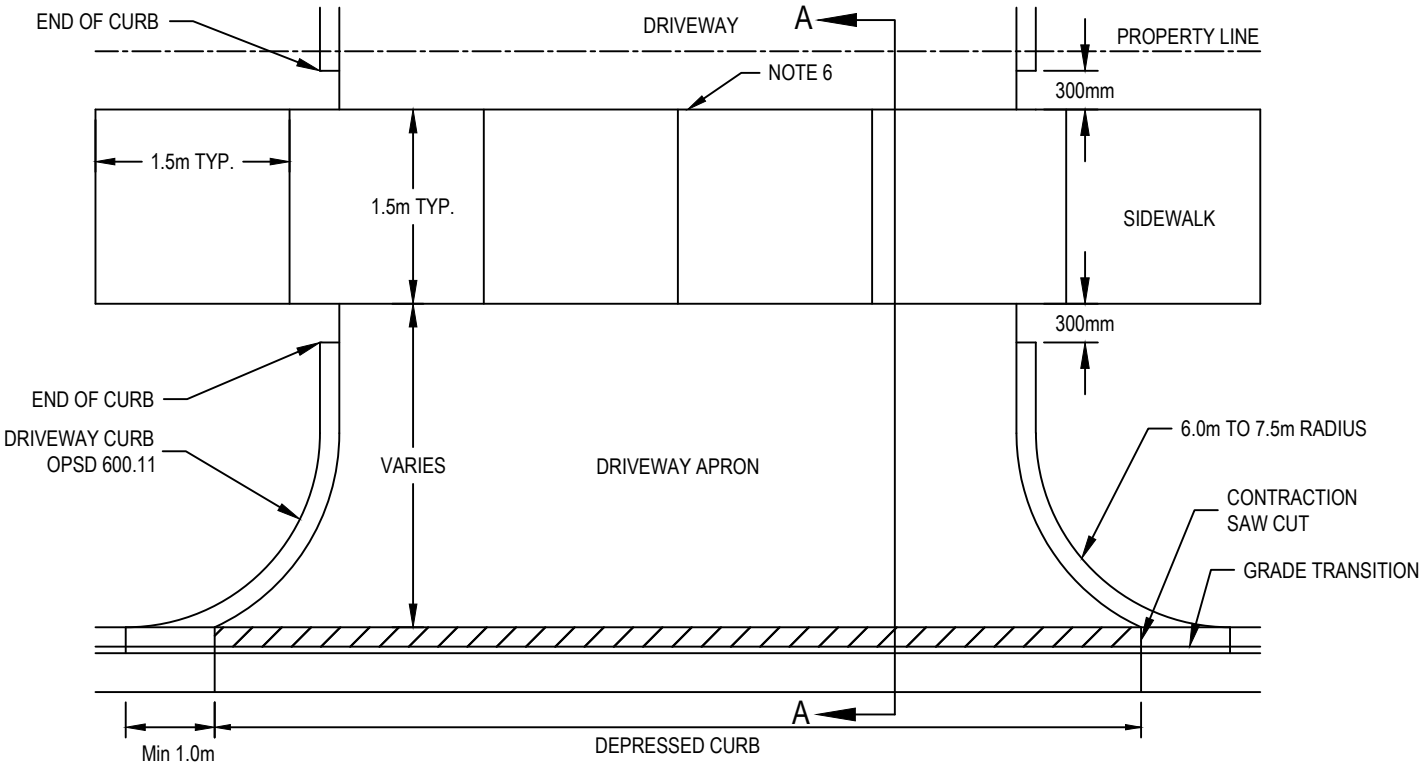

ELEVATION

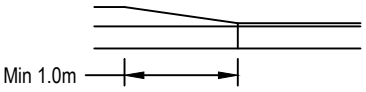

SECTION 'A-A'

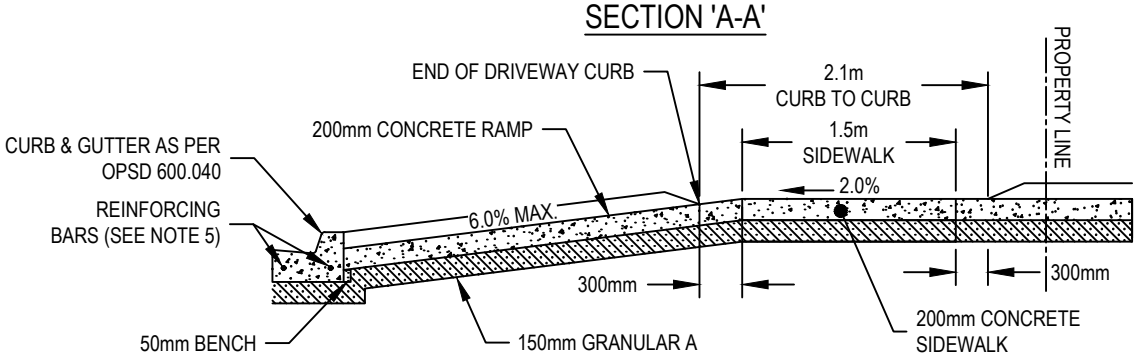

NOTES:

1. ALL TOPSOIL AND SOD TO BE REMOVED FROM LIMITS OF PROPOSED DRIVEWAY.
2. GRANULAR TO BE COMPACTED TO 100% S.P.D.
3. MAXIMUM DRIVEWAY GRADE: 6.0%.
4. THICKNESS OF CONCRETE SIDEWALK AT DRIVEWAYS SHALL BE 200mm.
5. 2-15M REINFORCING BARS SHALL BE PLACED AT A HEIGHT OF 50mm ABOVE THE BOTTOM OF THE CURB AND GUTTER, ONE 76mm FROM THE FRONT FACE, AND ONE 76mm FROM THE BACK.
6. EXPANSION JOINT MATERIAL SHALL BE INSTALLED AT THE BACK OF THE SIDEWALK.
7. ALL DIMENSIONS ARE IN MILLIMETERS UNLESS OTHERWISE SPECIFIED.

INDUSTRIAL / COMMERCIAL DRIVEWAY ENTRANCE

TOWNSHIP OF WILMOT
PUBLIC WORKS AND ENGINEERING DEPARTMENT

DATE: FEBRUARY 2022

SCALE: NTS

DWG No.: WIL-DET-22-39 | REV: 0

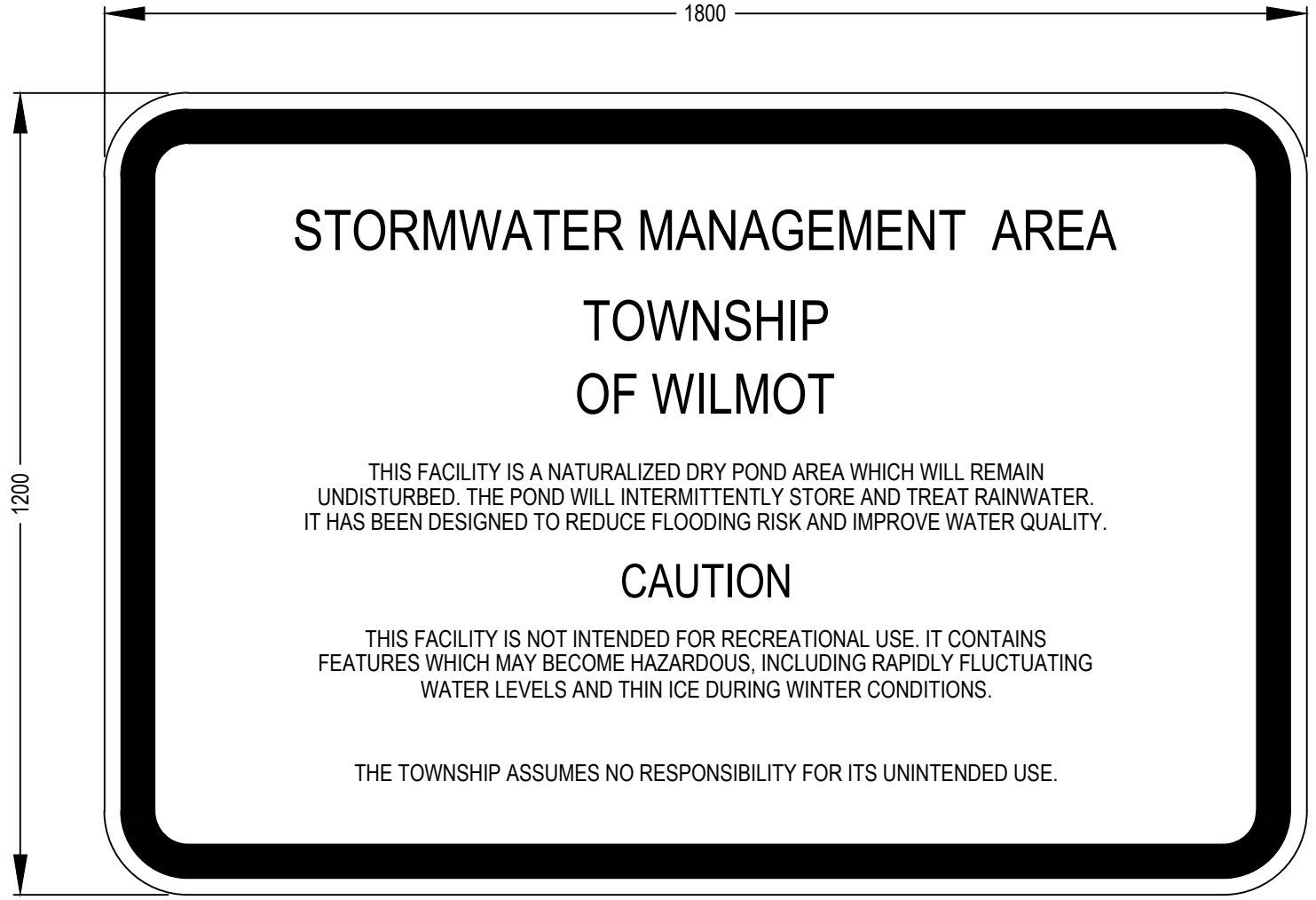

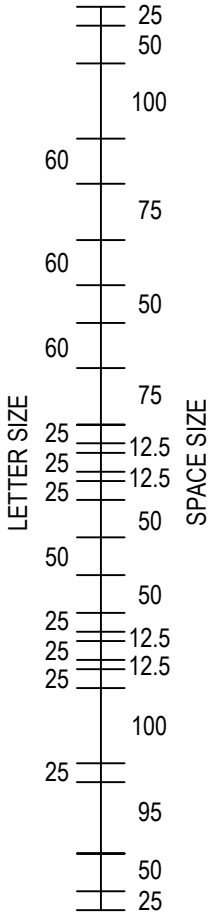

NOTE:

1. SIGN TO BE PAINTED WITH ROYAL BLUE LETTERS AND BORDERS.
2. SIGN TO BE SUPPLIED AND MOUNTED BY THE CONTRACTOR.
3. SIGN TO BE MOUNTED ON 100mm x 100mm WOOD POSTS WITH SUITABLE FRAMING. POSTS TO BE SUPPLIED AND INSTALLED BY THE CONTRACTOR.
4. SIGN TO BE CONSTRUCTED OF 20mm THICK PLYWOOD TO THE DIMENSIONS SHOWN.

STORMWATER MANAGEMENT AREA SIGN

TOWNSHIP OF WILMOT
PUBLIC WORKS AND ENGINEERING DEPARTMENT

DATE: FEBRUARY 2022

SCALE: NTS

DWG No.: WIL-DET-22-40 | REV: 0

NOTES:

1. CONCRETE CHAMBER AS PER OPSD 1108.010 OR PRECAST EQUIVALENT.
   - ADJUSTMENT UNITS FOR FRAME INSTALLATION WILL NOT BE PERMITTED, ONE PIECE CONSTRUCTION ONLY (MAX HEIGHT 1.0m)
   - ONE PIECE ADJUSTMENT UNIT MUST EXTEND MINIMUM 100mm TO MAXIMUM 300mm ABOVE FINISHED GRADE.
   - FRAME TO BE POURED INTO CONCRETE RISER.
2. ACCESS FRAME MUST BE LOCKABLE AND COVER SHALL BE BILCO TYPE J-AL (1050mm x 1050mm MIN.) OR APPROVED EQUIVALENT. 2.0m CLEARANCE TO BE MAINTAINED AROUND ENTRANCE FRAME.
3. CONCRETE CHAMBER TO BE APPROPRIATELY SIZED AND INSTALLED IN A LANDSCAPED AREA.
4. 350mm CLEARANCE TO BE MAINTAINED FROM CHAMBER FLOOR.
5. CONCRETE SUPPORTS TO BE UNDER ALL VALVES AND METER.
6. BY-PASS LINE SIZE TO BE SAME SIZE AS THE METER LINE, BE IN CLOSED POSITION, AND SEALED BY THE TOWNSHIP.
7. METER CHAMBER MUST BE WATERPROOF AND BE SELF DRAINING.
8. DOUBLE CHECK DETECTOR ASSEMBLY TEST PORTS TO BE PLUGGED USING MEANS THAT IS WATER TIGHT AND INSTALLATION MUST COMPLY WITH THE REGION OF WATERLOO BACKFLOW PREVENTION BY-LAW.
9. NO CONNECTION FOR AN IRRIGATION OR OTHER TYPES OF EQUIPMENT ARE PERMITTED WITHIN CHAMBER.
10. IF A BACKFLOW DEVICE IS REQUIRED, A SEPARATE CHAMBER IS REQUIRED.
11. A FLUSH MOUNT ACCESS HATCH IS AN ACCEPTABLE INSTALLATION WITHIN A WALKWAY, PROVIDING A BILCO LU-2 GALVANIZED LADDERUP SAFETY POST IS INSTALLED AT THE ENTRANCE.
12. VEHICLES MAY NOT PARK WITHIN 2.0m OF THE CHAMBER.
13. BACKFLOW PREVENTER TO BE ON "UPSTREAM' SIDE OF METER.
14. ALL METALLIC PIPE AND FITTINGS ARE TO BE WRAPPED AS PER DGSSMS.
15. TRACER WIRE TO BE CONNECTED TO PIPE AND FITTINGS AS PER DGSSMS. THE WIRE IS TO EXTEND TO MH LID AND EXCESS WRAPPED AROUND LADDER RUNG.
16. MAINLINE WATER METER TO BE SUPPLIED BY THE APPLICANT. WATER METER TO BE AN ELECTROMAGNETIC METER MANUFACTURED BY SENSUS, MODEL HYDROVERSE METER OR APPROVED EQUIVALENT. MANUFACTURER AND MODEL NUMBER TO BE PROVIDED TO THE TOWNSHIP ON REVIEW AND ACCEPTANCE.

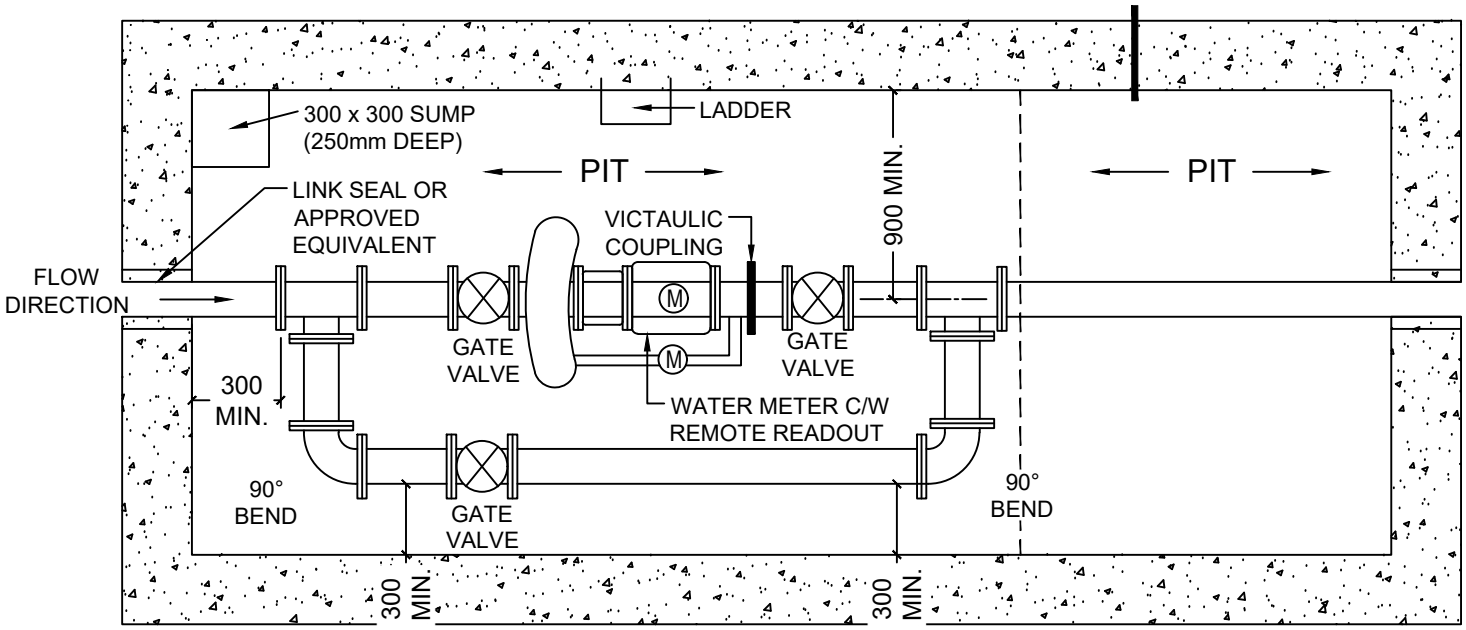

TYPICAL WATER METER INSTALLATION

TOWNSHIP OF WILMOT
PUBLIC WORKS AND ENGINEERING DEPARTMENT

DATE: MARCH 2022

SCALE: NTS

DWG No.: WIL-DET-22-41 | REV: 0

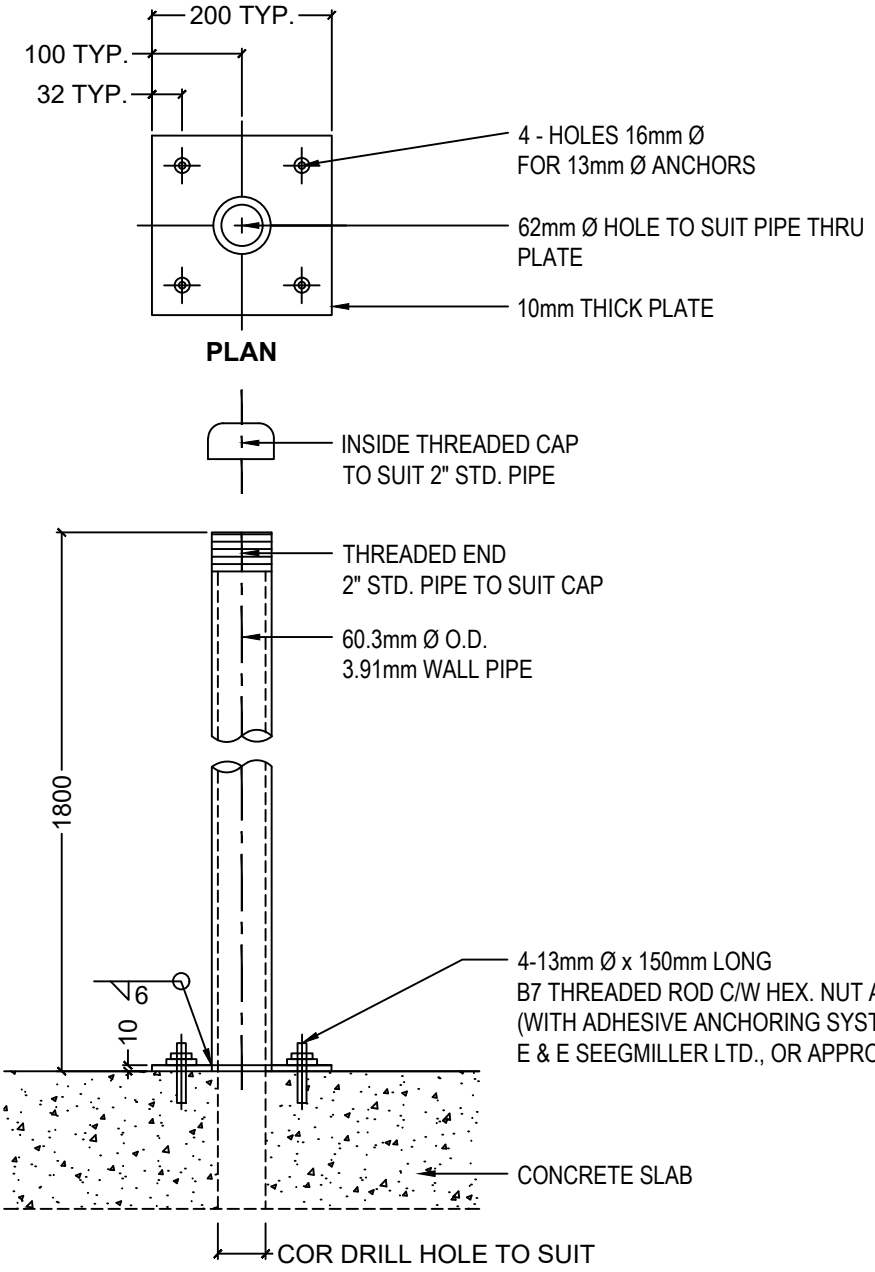

ELEVATION

NOTES:

1. PIPE SHALL BE ACCORDING TO ASTM A 53M, GRADE B.
2. PLATES SHALL CONFORM TO G40.20/G40.21, GRADE 300W.
3. WELDING SHALL CONFORM TO THE LATEST ISSUE OF CSA SPECIFICATION W59.
4. PIPE SHALL BE HOT DIP GALVANIZED ACCORDING TO ASTM A123 AFTER FABRICATION.
5. CALL 519-634-8525 FOR ASSISTANCE.

REMOTE MOUNTING POST:

6. MUST BE A 50mm GALVANIZED PIPE, NO LESS THAN 4' AND NO MORE THAN 5' ABOVE FINISHED GRADE, THREADED ON TOP AND SUPPLIED WITH A CAP TO FIT.
7. AT NO TIME CAN THIS POST BE STRAPPED TO THE SIDE OF THE CHAMBER.
8. REMOTE ELECTRONIC READERS ARE TO BE PURCHASED FROM THE TOWNSHIP AT THE TIME OF BUILDING PERMIT APPLICATION.

REMOTE MOUNTING POST DETAIL

TOWNSHIP OF WILMOT
PUBLIC WORKS AND ENGINEERING DEPARTMENT

DATE: MARCH 2022

SCALE: NTS

DWG No.: WIL-DET-22-42 | REV: 0